INDIAN JOURNAL OF ACCOUNTING

VOL. XXXII DECEMBER 2001

JOURNAL OF
THE INDIAN ACCOUNTING ASSOCIATION

EDITORIAL BOARD

EDITORIAL

New millennium is bringing new challenges to our accounting profession. We have to restructure our accounting mechanism and techniques to meet the emerging requirements of trade, industry and commerce. The Institute of Chartered Accountants of India and other professional bodies in the field of accounting is making all efforts to build its competencies. Members of the accounting discipline have to think deeper to get more closer to the complexities of real life complex situations. This issue of the journal is devoted to varied issues affecting accounting education and research. Dr. B. Banerjee has undertaken a study to study the corporate financial reporting practices with a sample size of 50 companies where in he has tried to see the practices of Indian corporate sector regarding disclosure of voluntary and non voluntary information. Prof. H.C. Sardar and Deepak Thakkar have made a comparison between EVA and other performance indicators especially ROI. The paper has shown the comparison of ROI and EVA by using the historical and inflation adjusted figures. Dr. Hemendra Porwal and Sangeeta Porwal gave a detailed account of changing structure of financial statements in historical perspective. Keeping in mind the countries like India and Malaysia, they discussed present value techniques in accounting measurement. Dr. Lalit Gupta and Mrs. Vidhi Bhargave have given a vivid description at on going research efforts on the EVA. Newer areas of corporate social reporting were identified by Dr. Nour and Dr. Pramanik. Dr. Y.V. Reddy and Mr. R. Satish have made a study of 125 public ltd. companies to discuss disclosure practices related to EVA. Dr. Mohite, Sonar and Mohite have used structured frame work of profit identity relationship to examine profitability of urban cooperative bank. Empirical evidences with respect to use of EVA was also shown by Dr. Saxena and Dr. Saini.

1.1.2002 **Editors**

INDIAN ACCOUNTING ASSOCIATION

PAST PRESIDENTS

1. Shri Raghunath Rai, Chartered Accountant, Varanasi
2. Dr. S.N. Sen (Late), Former Vice Chancellor, Calcutta University, Kolkata
3. Dr. S.K.R. Bhandari, Former Vice Chancellor, A.P.S. University, and Former Dean FMS, BHU, Varanasi
4. Dr. G.D. Roy (Late), Former Professor, Calcutta University, Kolkata
5. Shri M.C. Bhandari (Late), Chartered Accountant, Kolkata
6. Dr. K.S. Mathur, Former Professor, University of Rajasthan, Jaipur
7. Dr. R. Rajagopalan, Former Addl. Secretary, Gonvernment of India, New Delhi
8. Dr. L.S. Porwal, Former Pofessor in Commerce, Delhi University, Delhi
9. Dr. H.C. Mehrotra, Ex Dean, Faculty of Commerce, Agra University, Agra
10. Shri S.M. Dugar, Ex Member, Company Law Board, Government of India, New Delhi
11. Dr. S.P. Gupta, Ex Dean, Faculty of Commerce, Rohikhand University, Barelly
12. Shri Sukumar Bhattacharya, Chartered Accountant, Kolkata
13. Dr. Dool Singh, Retd. Professor, Dean Management, Kurukshetra University, Kurukshetra
14. Dr. M.C. Khandelwal, Retd. Professor, Dean Faculty of Commerce, University of Rajasthan, Jaipur
15. Dr. B. Banerjee, Professor of Commerce, Calcutta University, Kolkata
16. Dr. Chhote Lal, Ex Dean and Professor of Management, B.H.U., Varanasi
17. Dr. N.M. Khandelwal, Professor & Director, Faculty of Mgmt. Studies, M.D.S. University, Ajmer
18. Dr. U.L. Gupta, Retd. Professor & Dean Faculty of Commerce, J.N.V. University, Jodhpur
19. Dr. K.R. Sharma, Retd. Professor, Chairman Faculty & Dean, P.G. Studies, M.L.S. University, Udaipur
20. Dr. Bhagwati Prasad, Retd. Professor & Director, Kausali Institute of Mgmt., Karnataka University, Dharwar
21. Dr. Nageshwar Rao, Professor & Director, J.L. Nehru Institute of Business Management, Ex Dean FMS, Vikram University, Ujjain
22. Dr. B. Ramesh, Professor & Head, Deptt. of Commerce, Goa University, Goa
23. Prof. K. Eresi, Professor & Chairman, Faculty of Commerce, Bangalore University, Bangalore

CONTENTS

◆ ◆ ◆

Indian Journal of Accounting
Vol. XXXII December 2001

CORPORATE FINANCIAL REPORTING PRACTICES IN INDIA

*Dr. Bhabatosh Banerjee

ABSTRACT

Business firms communicate results of their operations and statement of affairs to various user-groups normally through annual accounts which comprise a number of financial statements and reports. The objective of financial reporting lies in providing information that is useful in business and economic decisions. Annual reports of 50 companies were taken as sample to study current financial reporting practices in India. The study has concluded that the quality of information provided by bigger companies has improved considerably. More and more additional voluntary information is being provided by big companies.

I. INTRODUCTION

The regulation of accounting and reporting for producing quality accounting information and their disclosure in the annual accounts differ from country to country. In India, accounting and reporting have to be in compliance with the provisions of the Companies Act, 1956, accounting standards issued by the Institute of Chartered Accountants of India (ICAI) and the guidelines prescribed by the Securities and Exchange Board of India (SEBI) for listing agreement. Financial reporting has assumed a social function and the interests of many user groups are involved in it. Needles to mention, over the years, financial reporting has undergone many changes to meet the changing societal requirements. The objective of this paper is to examine whether the quantity and quality of information disclosed in company-annual reports have improved over the years and whether business enterprises are disclosing additional information voluntarily to meet the increasing demand of the users of accounts and if so to what extent.

Several studies (Dasgupta, 1977; ICAI, 1981, 1985; Lal, 1985, Banerjee, 1994; Chakravorty, 1994) have examined the corporate reporting practices in India. We also analyse the current reporting practices in the corporate sector as indicated by the reporting practices by a number of selected companies across various industries for the financial year 2000-2001.Section 2 deals with methodology and selection of sample companies. The reporting practices are described in Section 3. In Section 4, we address the question why do companies disclose additional information

*Professor of Commerce, University of Calcutta and former Chief Editor, Indian Journal of Accounting

voluntarily. The findings and limitations are summarized in the last section.

II. Methodology

The Sample : Annual reports for the year ended 31st March, 2001 (i.e. financial year 2000-2001) of 50 companies were collected. These companies were divided into two groups:

Group A : 25 companies that form part of BSE (Mumbai Stock Exchange) Sensex and are among the top 50 companies out of 500 companies ranked by The Economic Times of India based on market capitalization (prices prevailing between January 15 and January 31, 2001). These companies are hereinafter referred to as ET companies . The selection of 25 companies among the top 50 of ET companies is based on availability of annual reports.

Group B : 25 companies that are enlisted on BSE or other stock exchanges but are outside the 500 ET companies. These companies too are selected based on the availability of annual reports. This method of judgmental sample selection may not be free from some limitations.

Out of 25 companies belonging to group A, only 3 belong to public sector (BHEL, ICICI and SBI respectively). The selected 50 companies are shown (arranging them alphabetically) in the Appendix.

The reason for putting the companies into two groups as above is not difficult to comprehend. Companies belonging to top 50 ET companies and forming part of BSE Sensex represent the major industry groups whose reporting practices may be far better than those of others and such practices may be trend setter in relation to disclosure of information over and above the legal requirements. Whether this is a reality or not can be tested through analysis of the practices of the other group that does not form part of 500 ET companies at all. To what extent these companies lag behind of the first group of companies in respect of disclosure of additional information in annual accounts may be another matter for study.

III. Current Reporting Practices

We examine the compliance with regulatory measures. There are two aspects of the matter, viz., compliance with provisions of the Companies Act 1956 and compliance with accounting standards issued by the ICAI.

(i) **Compliance with legislative provisions** : Tables 1A and 1B show the position regarding compliance with the provisions of the Companies Act, 1956 and other related regulations. It may be mentioned that under sections 210 and 211 of the Act, a Profit and Loss Account and a Balance Sheet are two

compulsory components of company annual accounts (items 1-4). Director s Report must disclose information relating to employees [sec. 217(2A)], energy conservation [sec. 217(1)(e)] and managerial responsibility on preparation of financial statements [sec. 217(2AA)]. These are covered by item 5 except disclosure of information on energy conservation which is dealt with separately in tables 2A and 2B. Cash Flow Statement (item 6) is compulsory for listed companies as per SEBI guidelines for Listing Agreement. The same is true in case of items 7 & 8. The other items in tables 1A and 1B are voluntary in nature.

Table 1A
Information disclosed in Annual Accounts of 25 group A companies

		In the private sector		In the public sector		Total companies	
		No.	%	No.	%	No.	%
1.	Balance Sheet (Part I of Sch. VI)						
	A. Horizontal Form	-	-	-	-	-	-
	B. Vertical Form	22	100	3	100	25	100
2.	Profit & Loss A/c (Part II)	22	100	3	100	25	100
3.	Balance Sheet Abstract and Company s General Business Profile including EPS (Part IV)	22	100	3	100	25	100
4.	Accounting Policies & Notes on Balance Sheet & Profit & Loss A/c	22	100	3	100	25	100
5.	Disclosure in the Director's Report [Secs. 217(2A) & 217(2AA)]	22	100	3	100	25	100
6.	Cash Flow Statement	22	100	3	100	25	100
7.	Corporate Governance Report	21	95	3	100	24	96
8.	Management Discussion & Analysis Statement	12	55	3	100	15	60
9.	Financial Highlights	18	82	2	67	20	80
10.	Information on Human Resource	9	41	2	67	11	44
11.	Funds Flow Statement	3	14	0	0	3	12
12.	Value Added Statement	2	9	0	0	2	8
13.	Social Accounts	2	9	0	0	2	8
14.	EVA 3	14	0	0	3	12	
15.	EPS : Basic	3	14	0	0	3	12
	Diluted	3	14	1	33	4	16

Source : Annual Reports of companies, 2000-01.

Table 1A reveals that the compliance with statutory disclosure requirement is a general phenomenon. All the companies in our sample have included in their annual accounts balance sheets with supporting schedules, profit and loss accounts with required break-ups, auditor s reports, directors reports and cash flow statement. Thus, there is 100% compliance with respect to items 1-6. As expected, many companies have ventured to disclose some additional information keeping in view the diversified needs of the users. The reporting scenario is the same across companies in the private sector and those in the public sector.

Table 1B
Information disclosed by 25 group B companies

		In the private sector	
		No.	%
1.	Balance Sheet (Part I of Sch. VI)		
	A. Horizontal Form	-	-
	B. Vertical Form	25	100
2.	Profit & Loss A/c (Part II)	25	100
3.	Balance Sheet Abstract and Company's General Business Profile including EPS (Part IV)	25	100
4.	Accounting Policies & Notes on Balance Sheet & Profit & Loss A/c	25	100
5.	Disclosure in the Director s Report [Secs. 217(2A) & 217(2AA)]	25	100
6.	Cash Flow Statement	25	100
7.	Corporate Governance Report	5	20
8.	Management Discussion & Analysis Statement	3	12
9.	Financial Highlights (at least for 5 years)	2	8
10.	Information on Human Resource	1	4
11.	Funds Flow Statement	0	0
12.	Value Added Statement	0	0
13.	Social Accounts	0	0
14.	EVA	0	0
15.	EPS : Basic	0	0
	Diluted	0	0

Source : Annual Reports of companies, 2000-01.

Regarding voluntary disclosure of additional information, we find that, except item number 10, public sector companies are behind others. But the number of enterprises belonging to the public sector in group A is only three compared with twenty-two belonging to the private sector. However, the findings are not in

agreement with the findings of Chakravorty s study (1994). Table 1B also shows that in respect of disclosure of items 1-6, there is no difference between the reporting practices of two groups of companies. We, however, find significant difference in respect of items 7 and 8. But clause 49 of the Listing Agreement has made provision for staggered implementation in respect of certain categories of companies. MD&A is considered as part of Corporate Governance. So, giving allowance for this provision in the Listing Agreement, it can be concluded that there is no significant difference in reporting for items 1-8 between the two groups of companies. Regarding disclosure of voluntary information (items 9-15), companies belonging to group A disclose more information than those in group B.

Providing information on EPS, being part of balance sheet abstract and company s general business profile, is mandatory. But showing EPS information splitting into basic and diluted ones, is voluntary as AS-20 becomes effective from accounting periods commencing on or after 1.4.2001. Secondly, it is applicable to certain specified classes of enterprises only. Table 1A shows that only 12% (Bajaj Auto, ITC & Infosys) have reported basic EPS and 16% (Colgate Palmolive, ICICI, Infosys and ITC), diluted EPS. In case of companies outside ET 500 group (Table 1B), none has reported EPS in this context. However, for group A companies, one good thing is that five companies (e.g., Bajaj Auto, BSES, Gujrat Ambuja, Hindalco and Reliance Industries) have also disclosed cash EPS.

From 1.4.1989, Director s Report is to include particulars as to conservation of energy, technology absorption and foreign exchange earnings and outgo [Sec. 217(1)(e)]. Only manufacturing companies belonging to 21 industry groups are required to furnish information in form A & B under section 217(1)(e). We have therefore to exclude all the non-manufacturing companies from the sample. In other words, four enterprises from group A (serial numbers 13, 14, 22 & 25) and eight enterprises from group B (serial numbers 8, 11, 12, 15, 19, 20, 21 & 24) companies, as shown in the Appendix are excluded. The revised sample for the purpose of section 217(1)(e) then stands at 21 for group A and 17 for group B respectively. The position of environmental information disclosure in the Director s Report is given in tables 2A & 2B respectively.

Table 2A
Environmental information in the Director s Report (group A companies)

Descriptive & A & B forms		Only A & B forms		Total	
No.	%	No.	%	No.	%
4	19	17	81	21	100

Source : Annual Reports of companies, 2000-01.

Table 2B
Environmental information in the Director s Report (group B companies)

Descriptive & A & B forms		Only A & B forms		Total	
No.	%	No.	%	No.	%
1	6	16	94	17	100

Source : Annual Reports of companies, 2000-01.

There is 100% compliance with respect to sec. 217(1)(e) among the sample companies. None, however, furnished information in the Balance Sheet in the form of either asset identification or contingent liability. A few companies furnished information in descriptive form in addition to providing information in forms A & B. Among the two groups, however, the percentage, in this context, is higher in group A than that in group B.

Another significant finding is that there is diversity in presentation of profit and loss account. Information on cost of sales, profit before changes in accounting policies, profit per share, etc., are hardly available. Because of diversity of presentation, the understanding, comparability and reliability of many information contained in the profit and loss may be questioned. The lack of certain vital information as stated earlier also greatly reduces usefulness of the profit and loss account. Regarding balance sheet, all the companies followed vertical form for presentation. This shows the popularity of vertical form over the horizontal form.

Dasgupta in his study (1977) found variation in reporting practices regarding form, layout and get up. He observed (p.115) :

> ***"As regards the arrangement of subject matter in the report, a great deal of variation is found. Most of the companies have given other information first and statutory accounts afterwards, whereas some companies have reversed it or divided the other information in two parts so as to give some in the beginning and some at the end, and the statutory information in between them."***

The above trend is no longer found in the present case study. There has been therefore remarkable improvement in corporate reporting practices. The three significant inclusions in the Annual Reports are :

- Accounting Policies and Notes on Balance Sheet and Profit & Loss Account.
- Cash Flow Statement.
- Corporate Governance Report.
- Management Discussion and Analysis (MD&A).

Accounting Policies and Notes on Balance Sheet & Profit & Loss Account: It has now become mandatory to annex notes to the financial statements disclosing the accounting policies and also explaining the treatment of certain items that appear in the profit & loss account and balance sheet. This helps understanding and interpretation of the accounting numbers. Tables 1A and 1B show that 96% in group A and 100% in group B have done this. This is undoubtedly no less significant improvement in the corporate reporting scenario.

Accounting Policies and Notes on Accounts of Infosys Ltd. are exemplary because they are elaborate, extensive, unambiguous and significant. Paragraphs 13.1 - 13.1.13 (pp .68-69) relate to accounting policies and paragraphs 13.2 13.2.29 represent Notes on Accounts (pp. 70 -77). The statements on basis of preparation of financial statements are as follows:

> ***"The financial statements are prepared under the historical cost convention, in accordance with Indian Generally Accepted Accounting Principles (GAAP) comprising the mandatory accounting standards issued by the Institute of Chartered Accountants of India and the provisions of the Companies Act, 1956, on the accrual basis, as adopted consistently by the company." (p. 68).***

The company has mentioned accounting policies adopted relating to:

- Revenue recognition
- Expenditure
- Fixed assets
- Capital work-in-progress
- Depreciation
- Retirement benefits to employees
- Research and development
- Foreign currency transactions
- Investments
- Income-tax, and
- Earnings per share.

Cash Flow Statement : A cash flow statement is not presently required to be submitted under the Companies Act. But as per SEBI Guidelines (dated 26.6.1995) a listed company is required to make an audited cash flow statement as part of financial statements. ICAI s revised standard AS-3 is now in favour of Cash Flow Statement. It has been made mandatory w.e.f. 1.4.2001 for (a) listed companies, and (b) enterprises whose turnover for the accounting period exceeds Rs.50 crore. This is a welcome development as it will help measure the liquidity position of the reporting entities more accurately. Tables 1A and 1B show that, all the companies have included cash flow statement in their financial statements.

Corporate Governance Report : Corporate governance is a systematic process by which companies are directed and controlled to enhance their wealth generating capacity. Since large companies employ vast quantum of societal resources, the

governance process should ensure that these companies are managed in a manner that meet the stakeholders aspirations and societal expectations. Two core principles of corporate governance are:

- managerial freedom to drive the enterprise forward without undue restraints, and
- exercise of managerial freedom within a framework of effective accountability.

From the above concept and core principles of corporate governance, there emerge the cornerstones of governance philosophy which are:

- trusteeship;
- transparency;
- empowerment and accountability, and
- control and ethical corporate citizenship.

Accordingly, a corporate governance report must provide information on key areas of management of the companies which would help assess as to whether or not companies are managed in the best possible way to meet the stakeholders aspirations and societal expectations. Strong corporate governance is indispensible to resilient and vibrant capital markets and is an important instrument of investor protection. Clause 49 of the Listing Agreement requires incorporation of corporate governance report as part of financial statements. Section VII of Clause 49 states that :

> ***"The company agrees that there shall be a separate section on Corporate Governance in the annual reports of company . Annexure 2 provides a list of items (mandatory) to be included in the report and annuxure 3 gives non-mandatory requirements."***

Regarding the practice of reporting corporate governance in the annual accounts of the sample companies, table 1A shows that there is 96% compliance in this respect. But table 1B shows it to be only 20% because of inclusion of certain categories of companies that are permitted to implement it from the financial year 2001-2002 or 2002-2003.

MD&A : MD&A is prepared in compliance with the corporate governance requirement prescribed in the Listing Agreement (clause 49). The statements in MD&A describe company s objectives, projections, estimates and expectations that may be forward-looking statements within the meaning of applicable securities laws and regulations. Actual results could differ materially from those expressed or implied. So, readers are cautioned that the discussion contains certain forward-looking statements that involve risks and uncertainties. The contents of MD&A in

the Annual Reports of TISCO & BHEL are given below as examples.

TISCO	BHEL
- Business Review - Internal Control & Systems - Risk Management - Environment Management - Future Strategy - Industrial Relations and - Human Resource Management	- Financial Operations - Power Sector - Industry Sector - International Business - Capital Investment - Joint Ventures - R&D Technology Achievements - Participation in the Global Compact of the United Nations - Human Resource Management - Internal Control System - Opportunities and Threats - Risks and Concerns

Table 1A shows that 60% of our sample companies in group A have added MD&A to their annual reports. In group B, it is only 12% (table 1B). Nevertheless, inclusion of MD&A in the annual reports makes financial statements internationally competitive as both in the USA (MD&A) and in the U.K. (OFR) such statements form part of annual reports.

Some distinguishing features of reporting

In this section, we highlight good reporting practices of some of the sample companies. These are given under several subject matters that were reported by the companies in their respective annual reports.

(1) Mission and Value Creation Statement : ITC s Annual Report started with the following statements:

> ***Mission Statement*** : To enhance the wealth generating capability of the enterprise in a globalising environment, delivering superior and sustainable stakeholder value . The slogans are: Enduring Value. For the Shareholder. For the Nation . (2nd cover page).

The Report then defines what is meant by Adding Value (quoting them from the Chairman s Address at the AGM, 2000) in the following words:

> ***"An Indian enterprise is one that creates and captures value for the Indian economy and contributes to the virtuous economic cycle of investment, creation of jobs and the related demand and the generation and redeployment of surpluses for economic growth."***

ITC has attempted to achieve the value objective by not only driving each of its businesses to become internationally competitive, but also by consciously contributing to enhancing the competitiveness of the entire value chain of which it is a part.

Dr. Reddy s Annual Report (p. 32) states about its mission as follows:

> *" To be the first Indian pharmaceutical company that successfully takes its products from discovery to commercial launch globally."*

(2) Value chain and the competitive advantage : According to Porter (1985), in value chain approach each of the business functions is treated as an essential and valued contributor and is constantly analyzed to enhance customer value in the product/service relative to the cost incurred. The value chain approach is an integral part of strategic cost management that explicitly highlights strategic issues and concerns. Through systematic analysis of critical success factors a firm can identify and develop competitive advantage over its competitors. So, information on value chain of the firm in its annual report is an important piece of information to the users of accounts. Dr. Reddy s annual report states (p. 8), in this connection, as follows:

> *" End to end vertical integration provides:*
> - *Lower costs*
> - *Increased reliability*
> - *Increased flexibility*
> - *Reduced timing for regulatory filings."*

The report continues to portray the pharmaceutical giant s value chain as follows:

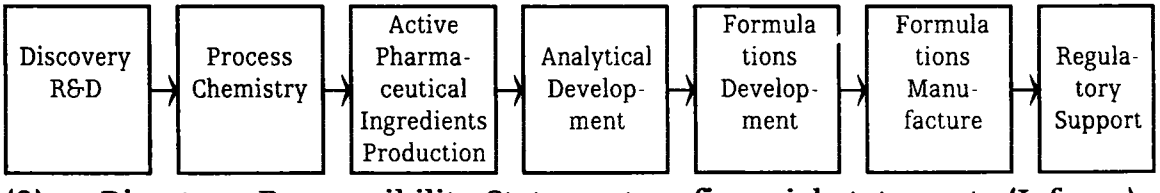

(3) Directors Responsibility Statement on financial statements (Infosys) : Section 217 (2AA) of the Companies Act, 1956 [introduced by the Companies (Amendment) Act of 2000] requires a statement from the directors on the financial statements to ensure that they have been made in compliance with accounting standards issued by the ICAI, that accounting policies followed by the company have been applied consistently, etc. While making such statements in compliance with the above requirement, Infosys Technologies Ltd. added the following words in the second paragraph of the Responsibility Statement (p. 37) :

> *"The board of directors and the management of Infosys accept responsibility for the integrity and objectivity of these financial statements. The estimates and judgements relating to the financial statements have been made on a prudent and*

reasonable basis, in order that the financial statements reflect in a true and fair manner, the form and substance of transactions, and reasonably present the company s state of affairs and profits for the year. "

(4) Operations Review (Ranbaxy) : Ranbaxy Laboratories Ltd. has given sales information, product-wise as well as domestic sales and export sales. This is followed by information on key markets. Detailed information on markets under the following segmentations are provided by the company:

- India
- U.S.A.
- Europe (U.K., Germany, Poland and others)
- China
- Brazil, and
- Rest of the world (Asea, Africa, Middle East, Sri Lanka, etc.)

(5) Human Capital (Zee Telefilms) : Zee Telefilms Ltd. in its Report (p. 16) shows through pie-charts information on human capital in terms of (1) Department-wise strength, (2) Organisation age profile, (3) Distribution by categories, and (4) Organisation qualification profile. The details of qualification profile are given as follows:

Engineers	5%
MBAs	11%
CAs	4%
Media	17%
Postgraduates	8%
Others	55%
Total	100%

(6) Operational and financial statistics (TISCO) : Most distinguishing parts of Tata Steel s Report are that the Report contains production, financial and dividend statistics since 1925-26 (pp. 57-59). Such time series data help determine trends in their respective fields. Apart from giving an audited Cash Flow Statement (as per clause 32 of Listing Agreement), the Company has also provided a Funds Flow Statement for five years (p. 25).

(7) Economic Value Added (HLL) : Hindustan Lever Ltd. recognizes that Economic Value Added (EVA) is increasingly being applied to understand and evaluate financial performance and gives EVA for the current year along with (unaudited) figures for the previous nine years to help ascertain trends in this context (p. 47). This is voluntarily disclosed by the Company.

EVA is residual income to the shareholders i.e. Net operating profit after taxes (NOPAT) less weighted average cost of capital on average capital employed. Research shows that it is not earnings per se but value which is important. EVA measures the

value added to the shareholders by generating operating profits in excess of cost of capital employed in the business.

(8) Consolidated accounts (HLL) : At present, submission of consolidated accounts is not required by law. A statement giving particulars of number of shares held, extent of holding, profits (losses) so far it concerns the members of the holding company and not dealt with in the accounts of the holding company, profits / (losses) so far it concerns the members of the holding company and dealt with in the books of accounts of the holding company (the last two information should be given also for the previous years since it became a subsidiary) is to be annexed pursuant to section 212 of the Companies Act. Hindustan Level Ltd. apart from giving such statement (p. 51) also provides, as additional disclosure, consolidated profit and loss account and balance sheet (pp. 48-49).

(9) Reconciliation with US GAAP : Table 3 shows that of the five companies showing reconciliation under US GAAP, Infosys has made maximum number of disclosures both in terms of consolidated accounts and in terms of reconciliation. It may be mentioned that for enlisting on the US stock exchanges, financial statements have to be prepared under US GAAP or when financial statements are prepared following the GAAP of a particular country, such statements have to be reconciled with US GAAP in respect of (a) Stockholders Equity, (b) Net Income and (c) Earnings Per Share along with Independent Auditor s Report and Notes to Reconciliations. However, in India companies are not subject to reporting and disclosure requirements as per US GAAP. Such disclosure has been either provided as additional disclosure on voluntary basis to assist Indian readers to understand the results under US GAAP (e.g. Reliance Industries) or it has been provided mainly for the U.S. readers (e.g. ICICI & Infosys).

Table 3
Financial statements and reconciliation with US GAAP

Companies Particulars	Bajaj Auto	Hindalco	ICICI	Infosys	Reliance Industries
1. Consolidated Accounts	x	x	- Balance sheet - Income Statement - Cash Flow Statement	- Five year financial data - MD&A - Balance sheet (2 yrs.) - Income Statement (3 yrs.) Cash Flow Statement (3 yrs.)	Profit & Loss A/c
2. Independent Auditor's Report	✓	✓	✓	✓	✓

3. Reconciliation :					
- Stockholders' Equity	✓	✓	✓	✓	x
- Net Income	✓	✓	✓	✓	✓
- EPS	✓				
Basic	x	x	✓	✓	x
Diluted	x	x	✓	✓	x
Weighted average number of shares	x	x	x	✓	x
- Notes to reconciliation	✓	✓	✓	✓	✓

Source : Annual Reports, 2000-2001. ✓ = Yes, x = No.

(ii) Compliance with Accounting Standards : It may be mentioned that many important standards, viz. Cash Flow Statement, Segment Reporting, Related Party Disclosures, Earnings per Share, Accounting for Income Taxes, etc., have been made mandatory with effect from the accounting period beginning from 1.4.2001. So compliance with them cannot be verified from the annual reports for the year ended 31.3.2001. Analysis of annual reports for the year ended 31.3.2002, or any subsequent period, will indicate whether the companies are complying or not with these accounting standards in preparation and presentation of annual accounts. The statement made under Accounting Policies in respect of new accounting standards by Infosys in its Annual Report (p. 70) is worth-mentioning in this context.

> ***"The Institute of Chartered Accountants of India (ICAI) have issued accounting standards on segment reporting, related party disclosures and earnings per share that are applicable to the financial statements of the company, and are mandatory effective from accounting period commencing on April 1, 2001. ...The company has evaluated the effect of these standards becoming mandatory and adopted the accounting standards on segment reporting, related party disclosures and earnings per share, and provides pro-forma information in relation to . accounting for income taxes in these financial statements."***

In spite of the shortcomings arising out of selection of accounting period, i.e. 2000-2001, we make an effort to analyze the accounts for the period 2000-2001 in respect of the sample companies and highlight the compliance with accounting standards. There is diversity in practices in compliance with accounting standards. Many companies mention briefly but clearly the policies with respect to revenue recognition, valuation of fixed assets and liabilities, depreciation methods, contingencies, goodwill and intangible assets, deferrals, and treatment of exchange differences for foreign currency transactions, retirements benefits, earnings from investments, etc. Majority put them under distinct headings while a few of them put them as notes to accounts. Accounting policies are very critical to the understanding

of accounting numbers and any ambiguity in their disclosure affects the quality of accounting information and their reliability. However, we are of the view that a separate detailed study relating to compliance with various standards can only assess the position fairly.

IV. Disclosure of information voluntarily

Our analysis shows that some companies have disclosed more information compared with those required by legal and professional norms. Earlier studies (Chakravorty, 1994; Banerjee, 1994) showed the same trend. Accordingly, the question arises: Why do companies disclose additional information voluntarily?

Research studies have shown that a variety of considerations motivate management of a company to disclose information voluntarily and not wait for mandatory requirements. Some of the important considerations for voluntary disclosure of information are:

- Stock market consideration
- Political costs consideration
- Users needs consideration, and
- Ideological goal consideration.

Stock market consideration : The most important reason for voluntary disclosure is considered to be the stock market consideration. Gray et. al. (1990) have argued that companies may be motivated to provide additional information to influence the stock prices. Several studies (e.g. Belkaoui, 1976; Andersen & Grankle, 1980; Shane and Spicer, 1983; Jaggi and Freedman, 1982) have been conducted to test the association between stock price movements and social disclosures. These studies have shown that management of a company may be motivated to provide social disclosures to influence the stock prices.

Political costs consideration : The political cost motive was originally developed by Watts and Zimmerman (1986). Fines, penalties, potential public hostility toward the company are the examples of political costs. It is now recognized that political costs may play an important role in decisions relating to additional disclosure in the form of social and environmental information (Belkaoui and Karpik, 1989). Disclosure of environmental information can be considered to reassure the public or the regulating agencies that companies were concerned about the environment and were doing everything possible to reduce the negative impact of their activities on the environment.

Users needs consideration : Guthrie and Parker (1990) have argued that companies may disclose social information to meet the stakeholders demand for such information. The argument is based on Users Utility Model. Disclosure of additional

information on a voluntary basis depends on the users needs, and how these needs are perceived by management of companies.

Ideological goal consideration : It has been argued that companies would be motivated to disclose voluntarily additional information to serve their own political and ideological goals (Guthrie and Parker, 1990). Such disclosure would be guided by companies agenda, ideologies and goals which are likely to be different for different companies even within the same industry. Consequently, disclosure of such information will vary from company to company.

So disclosure of additional information on a voluntary basis by the management of companies cannot be looked upon as something made by management without any purpose.

V. Concluding observations

Almost all the sample companies disclose information as required under the Companies Act, 1956, although there is a great amount of diversity in reporting information in the profit and loss account. Compliance with accounting standards appears to be good. Many companies are disclosing information much more than what is required under the Act. This is a good practice followed by a few companies. The quantity and quality of information provided in the financial statements, as reflected from the study of the sample companies for the period 2000-2001, have significantly improved compared with earlier studies.

The ***main findings*** are briefly given below :

- all the sample companies have disclosed mandatory information;
- there has been increase in the quantity of information provided in the annual reports due to changes in the legal provisions and introduction of more accounting standards to cope with the changing societal needs;
- big companies which form part of BSE Sensex are disclosing additional information voluntarily more than those of the small companies which are outside the 500 ET companies;
- the public sector companies no longer enjoy predominance on disclosure of additional information voluntarily; on the contrary, the companies in the private sector have taken over the leadership;
- the quality of information provided by the big companies has improved considerably and annual reports of some of these companies (e.g. Infosys, ICICI, Dr. Reddy s) are internationally competitive.

However, ***limitations*** of the present study have to be kept in mind. They are:

- The size of the sample is small. An increase in the number of the sample may give different picture.

- The study by its very nature gives emphasis on number of items disclosed in the annual reports (quantity) rather than quality of information contained in each. Thus, quantitatively reports of two companies may be the same, but they may vary widely in qualitative terms i.e. in terms of nature and type of information provided. Accordingly, analysis based on qualitative parameters would give better results.
- The study analyses position for one accounting period only. Analysis of annual accounts over a period of time would have given better picture and hence more reliable trend rather than what we get by comparing the findings of the present study with a few earlier studies.

Bibliography

Abdel-khalik, Rashad, A., "A Perspective on Financial Reporting in the USA", *Indian Accounting Review*, December, 1997.

AICPA, *Objectives of Financial Statement*, New York, October, 1973.

---------, *Improving Business Reporting - A Customer Focus*, 1994.

Anderson, J.C. and Frankle, A.W., "Voluntary Social Reporting : An Iso-Beta Portfolio Analysis", *Accounting Review*, 1980.

Banerjee, B., "Corporate Financial Reporting in India", in Sarker, J.B. (ed.), *Silver Jubilee Commemorative Volume*, The University of Burdwan, 1988.

Belkaoui, A., "The Impact of the Disclosure of the Environmental Effects of Organizational Behaviour on the Market", *Financial Management*, 1976.

Belkaoui, A., and I.G. Karpik, "Determinants of the Corporate Decision to Disclose Social Information", *Accounting, Auditing and Accountability Journal*, 1989, Vol.2, No.1.

Chakravorty, D.K., *Development of Corporate Accounting in India*, Venus Publishing House, New Delhi, 1994.

Choi, Frederick, D.S. and Mueller, Gerhard G., *International Accounting*, Prentice-Hall, 2nd ed.

Das Gupta, N., *Financial Reporting in India*, Sultan Chand & Sons, 1977.

Financial Reporting Council, *The State of Financial Reporting - Second Annual Review*, November, 1992.

Gray, S.J., Radebaugh, L.H. and Roberts, C.B., "International Perceptions of Cost Constraints on Voluntary Information Disclosures : A Comparative Study of U.K. and U.S. Multinationals", *Journal of International Business Studies*, 1990, Winter.

Guthrie, J. and Parker, L., "Corporate Disclosure Practice: A Comparative International Analysis", *Advance in Public Interest Accounting*, 1990.

Jaggi, B. and Freedman, M., "An Analysis of the Information Content of Pollution Disclosures", *Financial Review*, 1982.

Lal, Jawahar, *Corporate Annual Reports - Theory and Practice*, Sterling Publishers, 1985.

Nobes, C. and Parker, R., *Comparative International Accounting*, Prentice-Hall, 1998.

Porter, Michael, E., *Competitive Advantage : Creating and Sustaining Superior Performance*, New York : The Free Press, 1985.

Shane, P. and Spicer, B., "Market Response to Environmental Information Produced Outside the Firm", *Accounting Review*, 1983.

Watts, R. and Zimmerman, J.L., *Positive Accounting Theory*, Prentice Hall, Englewood Cliffs, New Jersey, 1986.

Watts, R.L., and Zimmerman, J.L., "Agency Problems, and the Theory of the Firm: Some Evidence", *Journal of Law and Economics*, October, 1983.

Appendix
List of sample companies

Group A	Group B
1. Associated Cement Corporation Ltd. (ACC) (44)	1. Ambuja Cement Rajasthan Ltd.
2. Bajaj Auto Limited (42)	2. Ansal Properties & Indus. Ltd.
3. Bharat Heavy Electricals Ltd. (BHEL) (31)	3. Aventis CropScience India Ltd.
4. BSES Ltd. (41)	4. Caplin Point Laboratories Limited
5. Castrol India Ltd. (34)	5. Chowgule Steamships Ltd.
6. Cipla Ltd. (18)	6. Ganesh Anhydride Limited
7. Colgate Palmolive Ltd. (49)	7. GIS Ltd.
8. Glaxo India Ltd. (47)	8. IIT Capital Services Ltd.
9. Grasim Industries Ltd. (40)	9. India Glycols Ltd.
10. Gujarat Ambuja Cement Ltd. (48)	10. Indian Acrylics Limited
11. Hindalco Industries Ltd. (24)	11. Jai Corp. Ltd.
12. Hindustan Lever Ltd. (2)	12.Kinetic Finance Ltd.
13. ICICI (17)	13. Malanpur Steel Ltd.
14. Infosys Technologies Ltd. (3)	14. NCL Industries Ltd.
15. ITC Ltd. (6)	15. NICCO UCO Alliance Credit Ltd.
16. Larsen & Toubro Ltd. (23)	16. Polar Pharma India Ltd.
17. Nestle India Ltd. (27)	17. Regency Ceramics Limited
18. Ranbaxy Laboratories Ltd. (16)	18. Seshasayee Paper & Boards Ltd.
19. Dr. Reddy s Laboratories Ltd. (32)	19. Shrachi Securities Ltd
20. Reliance Industries Ltd. (4)	20. Sterling Guaranty & Finance Limited
21. Reliance Petroleum Ltd. (5)	21.Sumedha Fiscal Services Ltd.
22. State Bank of India (10)	22. Suryavanshi Spinning Mills Ltd.
23. Tata Engineering Ltd. (50)	23. Tainwala Chemicals and Plastics (India) Ltd.
24. Tata Iron & Steel Ltd. (TISCO) (28)	24.Tourism Finance Corp. of India Ltd.
25. Zee Telefilms Ltd. (13)	25. Triveni Glass Ltd.

Note : Figures in parentheses indicate the rank assigned by The Economic Times of India based on market capitalization (prices prevailing from January 15-31, 2001).

◆ ◆ ◆

ECONOMIC VALUE ADDED AND ROI

A COMPARATIVE ANALYSIS

*Prof. H.C. Sardar
**Deepak J. Thakkar

ABSTRACT

The assessment of profitability is always a contentious issue for an accountant. Among the conventional methods used, Return on Investment (ROI) has got a wide acceptance among analysts, however Economic Value Added (EVA) has gained increased acceptance during the last decade. EVA, which takes into account the weighted average cost of capital for evaluating the companies performance not only discloses the genuine addition or draining of the net worth of the shareholders but can also be used for decision making purposes. The paper is an attempt to strike a comparison between EVA and other performance indicators especially the ROI. An attempt has also been made to evaluate the impact of inflation on the profitability and the performance indicators viz. EVA and ROI. A comparison has been made between EVA and ROI using the historical and inflation adjusted figures, using the financial statements of Ranbaxy Laboratories Ltd., as a case study.

INTRODUCTION

The entire world is under the influence of research and innovation. Endless researches in all fields are being carried out. Limitations of prior research create the need for further research. Accounting also is not an untouched area of research. However, in accountancy, new ideas, new thoughts and new concepts are time based. Different problems like Accounting for Human Resources, Inflation Accounting, etc. are still unsolved, while of late certain new concepts such as environmental accounting, value-added etc. have been evolved.

As an investor or potential investor, performance and profitability measurement is one of the significant yardsticks to evaluate/check their rationality behind the investment or potential investment of funds. The measurement of profitability can be done in different ways and so far no perfect method or technique is available for this purpose. For e.g. the computation of Return on Investment (ROI) is based on profit and due to lack of uniform concept of profit, determination of ROI is also debatable. ROI is a relative measure and it has its own benefits and limitations.

*Faculty Member, S.D. School of Commerce, Gujarat University, Ahmedabad.
**Chartered Accountant, Ahmedabad.

To have an appropriate estimate of profitability, some other techniques are required to be found to eliminate the limitations of ROI and to show the value generated by the organisation in a better way. To some extent, this requirement is satisfied by the concept of Economic Value Added (EVA).

Economic Value Added, a concept introduced by M/s. Stern Steward & Co. in the early eighties is a developing concept for measurement of performance as far as its application in India are concerned. Economic Value Added is a rupee amount rather than a ratio. It is found out by subtracting a capital charge from the net operating profits. This capital charge is found by multiplying the amount of assets employed by a rate, which is nothing but the overall cost of capital. Since the accounting records are influenced by inflation, both ROI as well as EVA, which are determined by taking into account the accounting figures, bear an impact of inflation. To examine the effect of inflation on performance measurement, inflation adjusted ROI and EVA can be found, which is the core concept of this paper.

How is EVA superior to ROI and other performance indicators?

Economic value added (EVA) measures a corporation s true economic profit. The objective of EVA is to understand which business units best utilise their assets to generate return and maximise shareholder value.

Comparing to the **ROI**, EVA cannot be used in absolute terms for the purpose of inter-firm comparison. The monetary figure of the EVA does not provide a basis since organisations differ in size. However, EVA also has its own advantages over ROI. Firstly, ROI if seen as a performance indicator may influence the investment decisions in two adverse ways. A project yielding a low ROI than the overall ROI will not be implemented even in case of idle funds. On the other hand, in case of a unit with extremely low ROI, any project yielding more than the current ROI will be accepted. Thus ROI leads to a bias towards little or no expansion in case of in high-profit business units and the reverse in case of low ROI business units.

There are subtle differences between EVA and other performance indicators as well. For example, **Earnings per share** tell nothing about the cost of generating those profits. If the cost of capital (loans, bonds, equity) is, say, 15 percent, then a 14 percent earning is actually a reduction, not a gain, in economic value. Profits used in **Return on Assets** also increase taxes, thereby reducing cash flow, so that engineering profits through accounting tricks can drain economic value. As Bennett Stewart, the leading authority on EVA, comments, the real earnings are the equivalent of the money that owners of a well-run business take away. Renowned investor Warren Buffet calls these owner s earnings as real cash flow after all taxes, interest, and other obligations have been paid. Return on assets is a more realistic measure of economic

performance, but it ignores the cost of capital. For instance, in its most profitable year in terms of total profits (1997- 98), **Ranbaxy Laboratories Lt.'s** return on assets was around 10 percent, but its cost of capital was almost 15.5 percent. Leading firms can obtain capital at low costs, via favourable interest rates and high stock prices (i.e. high share premium), which they can then invest in their operations at decent rates of return on assets. That tempts them to expand without paying attention to the real return, economic value-added. **Discounted cash flow** is very close to economic value-added, with the discount rate being the cost of capital.

METHODOLOGY

We have used the following methodology:

1. **Period of Study** : Year 1992- 93(31.3.1993) to year 1999 (31.12.1999)

2. **Ko i.e. weighted average cost of capital** :

$$\frac{[Ke * (\text{Equity Capital} + \text{Free reserves}) + (Kd * \text{Long term debt})]}{\text{Capital Employed.}} \times 100$$

Determining a firm s cost of capital requires making two calculations, one simple and one complex. The simple one figures the cost of debt, which is the after-tax interest rate on loans and bonds. The more complex one estimates the cost of equity and involves analysing shareholders expected return which appear in the price they have paid to buy or hold their shares. Investors have the choice of buying risk-free Treasury bonds or investing in other, riskier securities. They obviously expect a higher return for higher risk, which is reflected in the use of the Beta Variant of specific stock as shown below.

3. **Kd i.e. cost of debt** : Post tax interest rate on company s debentures.

4. **Ke i.e. cost of equity** : CAPM model i.e. Risk free rate of return + (Beta Variant * Market premium rate)

5. **Return on Investment (ROI)**:

$$\frac{\text{Operating Profit}}{\text{Capital Employed}} \times 100$$

6. **Capital Employed** : Total assets - Current Liabilities.

7. **Inflation adjusted ROI** :

$$\frac{\text{Inflation adjusted operating profit}}{\text{Inflation Adjusted Capital Employed}} \times 100$$

8. **Inflation adjusted Capital Employed :**

Inflation adjusted Fixed Assets + Net Current assets at historical cost

9. **Economic Value Added :**

Operating profit - (Ko * Capital Employed)

10. **Inflation Adjusted EVA :**

Inflation adjusted operating profit (Ko * Inflation adjusted Capital Employed)

11. **EVA in % :**

$$\frac{\text{Economic Value Added}}{\text{Capital Employed}} \times 100$$

12. **Inflation adjusted EVA in % :**

$$\frac{\text{Inflation adjusted Economic Value Added}}{\text{Inflation adjusted Capital Employed}} \times 100$$

13. **Sources :**

Economic intelligence Service : Centre for Monitoring Indian economy, Public finance, March, 2000-Rates of bank deposits.

Economic Survey 2000 : Indices of General Wholesale Price.

Historical data (Secondary) : Stock Exchange Official Directory, No. XXXIV/ 25/(1/2), Monday, 19 June, 2000. Company Reference No.: 77500

CASE OBSERVATION: RANBAXY LABORATORIES LTD.

1. As it appears from the figures, the company is having a negative EVA. This is because of the fact that excepting the first two years, the Cost of Capital of the company is exceeding its ROI. It can be seen from Annexure I, item (j) and item (o) that in the year 1993- 94 and 1994- 95, Ko is 12.18% and 11.91% respectively and on the other hand, the ROI is 21.99% and 22.2% respectively. Thereafter, for the rest period of study, ROI is less than Ko.

Year	31.3.93	31.3.94	31.3.95	31.3.96	31.3.97	31.3.98	31.12.98	31.12.99
ROI	21.99	22.20	9.91	8.86	9.78	9.98	6.96	4.58
Ko - WACC	12.18	11.91	13.67	15.72	15.78	15.40	15.64	15.42

2. The company has increased its equity by issuing shares at a huge premium. However, the company has not been able to utilise its resources in its own business, rather it has invested the amount it obtained through share capital in acquiring majority interest in companies.

3. Even if we add the non-operating income to the profits of the company, the company is not in a position to increase its level of ROI up to the overall cost of capital, therefore the EVA still remains negative.

4. The cost of capital is increasing primarily because of increase in the post tax cost of debt - which is a function of tax rate, which has shown a decreasing trend in the country. The rate at the national level is controlled by the Central Government. To fulfill the priorities, the government may alter the tax rate as required. The tax rate as shown in Annexure I, item (a) has a decreasing trend except for the year ending on 31.12.1999. The higher tax rate always reduces the post-tax cost of debt and consequently, the overall cost of capital also reduces.

5. There has been a reduction in the operating profits of the company even though the company has employed more capital.

6. The additional capital is invested in projects that return less than the cost of capital. As shown in Annexure I, item (b) and (e), the company has employed more capital, but has not been able to reduce the cost of capital. More importantly, the ROI has not been improved or been maintained to the level of initial years. (See item (j) of the same Annexure.)

However, these projects may be those of strategic importance or projects involving research and development (as is necessary in terms of the business of the company) which may yield returns at a later stage. (The company in question is well known for its allocation of resources towards research and development)

HOW DOES INFLATION AFFECT ECONOMIC VALUE ADDED.

Economic Value Added (EVA), one of the recent developments in the field of financial evaluation, is also subject to inflationary effects. As stated earlier, EVA is the excess of operating profit over the capital charge of the assets utilised by the organisation to earn that operating profits. In the process, we apply weighted average cost of capital to the capital employed to arrive at the capital charge of the assets utilised.

Inflation has a two-way effect on the above calculation. Not only does it affects

the value of capital employed, it also inflates the operating profits earned by the organisation. For instance, two similar machines brought in two different years will have two different costs the later one (normally) showing a higher figure. This leads to an incomparable figure of capital employed, wherein the later years shows a higher figure of capital employed. This also happens in case of operating profits. Profits of the later years do bear a positive impact of inflated prices and thereby increasing the EVA.

However, it is noteworthy that the cost of capital automatically gets adjusted with the changes in price (theoretically as well as practically). Providers of finance demand higher returns, when the prices are rising, to offset the diminishing value of the currency.

OBSERVATION WITH RESPECT TO INFLATIONARY EFFECTS:

As it appears from the graph and data sheet, the historical EVA bears the effect of inflated prices, which has been reduced by applying the index numbers. To arrive at the true figures, the amounts of capital employed as well as operating profits have been adjusted so as to eliminate the effect of inflation. The result that is obtained is as per the expectations. There has been a reduction in the economic value added, the moment it has been adjusted for the inflationary impact. In each year, the amount of inflation adjusted EVA is less than the amount of EVA as per historical records. This is not at all surprising. What is more noteworthy is that the rates of EVA also show a similar trend, which means the impact of inflation is more on the operating profits than that on the capital employed. This happens because, operating profits are solely the function of the current year, but the capital employed is a carried over figure which has a lesser inflationary effect. It can be observed from Annexure I, item (n) and Annexure III, item (j) that Historical Economic Value Added and inflation adjusted Economic Value Added has significant difference which shown reduction in purchasing power of rupee. ***In our view, to measure performance, it is very much essential to eliminate the effect of inflation.***

In this case study, it is found that the difference between ROI and Ko of inflation adjusted value is less than that of historical value. This figure also shows negative impact of inflation on EVA (Refer Annexure IV). The historical ROI is greater than the inflation adjusted ROI and since Ko remains constant, there will be a reduction in positive EVA and/or increase in the negative EVA.

LIMITATIONS

1. Instead of risk free rate of return for the period of study, bank deposit interest rates are considered. However, in terms of rationality, an investor would consider bank deposit rate akin to a risk free rate of return.

2. The indices used are that of general index of whole sale prices.

3. The effect of inflation to the capital employed is kept restricted to the amount of Fixed Assets only. The monetary assets are kept outside the purview of the study.

4. Since the year 1992- 93 (31.3.1993) is considered to be the base year for the purpose of evaluating the inflation effect, the Fixed Assets of that year are considered as acquired in the same year itself. However, this means that the assets purchased prior to 1.4.1992 are outside the purview of the adjustment of inflation.

5. The Ko or the Cost of debt is considered to be the rate at which the company has issued the debentures. The same rate has been applied to the total of long term debt, i.e. Debentures + Other long-term loans.

CONCLUSION

The measurement of earning capability of the company was a subjective matter before the concept of EVA. Of course, the main components of EVA, ROI and Ko are also not criticism/limitation free. But still the concept of EVA would play reasonably good role for profitability measurement. It is that surplus with the company, from which no party is to be paid as return, since the WACC or Ko take care of all the capital providers, whether they may be Equity Share holders, Preference Share holders, Debenture holders, Long term lenders, etc. Therefore, EVA will be positive when ROI exceeds Ko and vice versa.

But these are the days of inflation, which reduces the purchasing power of rupee. Rupee earned today is more powerful than rupee earned in future. In economy, more than a reasonable rate of inflation always plays a negative role. It can be considered as one of the greatest enemy of progress of economy. Therefore, to arrive at true and fair result of the business, eliminating the effect of inflation is a cardinal factor and hence the inflation effect in incorporated in the paper.

ANNEXURE - I

STATEMENT SHOWING CALCULATIONS OF ECONOMIC VALUE ADDED AND RETURN ON INVESTMENT

	Year	31.03.1993	31.03.1994	31.03.1995	31.03.1996	31.03.1997	31.03.1998	31.12.1998	31.12.1999
a	Tax rate	51.75	51.75	46.00	46.00	43.00	35.00	35.00	38.50
b	Amount of Debt	812810.00	1113230.00	2525410.00	2462540.00	3371492.00	3732290.00	3484690.00	3130280.00
c	Kd - Cost of debt	6.03	5.79	6.48	6.48	6.84	7.80	7.80	7.38
d	Kd*Debt	49012.44	64456.02	163646.57	159572.59	230610.05	291118.62	271805.82	231014.66
e	Equity	1125840.00	1837840.00	6164030.00	7829490.00	10627380.00	12759590.00	13793990.00	14830030.00
f	Ke - Cost of equity	16.62	15.62	16.62	18.62	18.62	17.62	17.62	17.12
g	Ke*Equity	187114.61	287070.61	1024461.79	1457851.04	1978818.16	2248239.76	2430501.04	2538901.14
h	Debt+Equity	1938650.00	2951070.00	8689440.00	10292030.00	13998872.00	16491880.00	17278680.00	17960310.00
i	Total Cost	236127.05	351526.63	1188108.35	1617423.63	2209428.21	2539358.38	2702306.86	2769915.80
j	Ko - WACC	12.18	11.91	13.67	15.72	15.78	15.40	15.64	15.42
k	Capital Employed	2050450.00	3317330.00	8955700.00	10571850.00	14302382.00	16595540.00	17493020.00	18109620.00
l	Operating Profits	450972.00	736479.00	887545.00	936377.00	1398196.00	1656009.00	1218108.46	828530.00
m	CE*Ko	249744.26	395154.92	1224514.12	1661398.19	2257330.89	2555319.56	2735828.66	2792943.03
n	Economic Value Added	201227.74	341324.08	-336969.12	-725021.19	-859134.89	-899310.56	-1517720.20	-1964413.03
o	Return on Investment	21.99	22.20	9.91	8.86	9.78	9.98	6.96	4.58
p	Rate of EVA	9.81	10.29	-3.76	-6.86	-6.01	-5.42	-8.68	-10.85

ANNEXURE - II
STATEMENT SHOWING IMPACT OF INFLATION ON CAPITAL EMPLOYED

	Year	31.03.1993	31.03.1994	31.03.1995	31.03.1996	31.03.1997	31.03.1998	31.12.1998	31.12.1999
a	Capital Employed	2050450.00	3317330.00	8955700.00	10571850.00	14302382.00	16595540.00	17493020.00	18109620.00
b	Fixed Assets	1303250.00	1693910.00	2597950.00	3675520.00	4293140.00	5742380.00	6135540.00	6319010.00
c	Net Current Assets	747200.00	1623420.00	6357750.00	6896330.00	10009242.00	10853160.00	11357480.00	11790610.00
d	Gross Fixed Assets	1672960.00	2205520.00	3291840.00	4599930.00	5469670.00	7347230.00	8045570.00	8675860.00
e	Net Addition	1672960.00	532560.00	1086320.00	1308090.00	869740.00	1877560.00	698340.00	1328630.00
f	Index Numbers	228.70	247.80	274.70	295.80	314.60	329.80	352.40	362.30
g	Average Indices	228.70	238.25	261.25	285.25	305.20	322.20	341.10	357.35
h	Total Cost @ 92-93 price (Base price)	1672960.00	2184172.89	3135144.70	4183909.58	4835644.63	6168350.94	6636572.45	7018659.27
i	Written off Depreciation	369710.00	511610.00	693890.00	924410.00	1176530.00	1604850.00	1910030.00	2356850.00
j	Yearly write off	106440.00	141900.00	182280.00	230520.00	252120.00	428320.00	305180.00	446820.00
k	Written off Dep. As % of Gross Fixed Assets	22.10	23.20	21.08	20.10	21.51	21.84	23.74	27.17
l	Base price * % of Depre.	369710.00	506658.16	660860.05	840805.81	1040150.68	1347348.32	1575531.94	1906661.37
m	Yearly Charge	106440.00	136948.16	154201.90	179945.75	199344.87	307197.64	228183.62	559313.05
n	Adjusted Net Fixed Assets	1303250.00	1677514.74	2474284.65	3343103.77	3795493.95	4821002.62	5061040.52	5111997.90
o	Adjusted Capital Employed	2050450.00	3300934.74	8832034.65	10239433.77	13804735.95	15674162.62	16418520.52	16902607.90

ANNEXURE - III
STATEMENT SHOWING EFFECTS OF INFLATION ON ECONOMIC VALUE ADDED AND RETURN ON INVESTMENT

	Year	31.03.1993	31.03.1994	31.03.1995	31.03.1996	31.03.1997	31.03.1998	31.12.1998	31.12.1999
a	Operating Profits	450972.00	736479.00	887545.00	936377.00	1398196.00	1656009.00	1218108.00	828530.00
b	INDEX	228.70	238.25	261.25	285.25	305.20	322.20	341.10	357.35
c	Adjusted Operating Profits	450972.00	706958.02	776962.84	750742.93	1047730.75	1175447.73	816714.45	530249.93
d	Add:Historical Depreciation	106440.00	141900.00	182280.00	230520.00	252120.00	428320.00	305180.00	446820.00
e	Less: Adjusted Depreciation	106440.00	136948.16	154201.90	179945.75	199344.87	307197.64	228183.62	559313.05
f	Net Adjusted Oper. Profits	450972.00	711909.86	805040.94	801317.17	1100505.88	1296570.09	893710.84	417756.88
g	Capital Employed	2050450.00	3300934.74	8832034.65	10239433.77	13804735.95	15674162.62	16418520.52	16902607.90
h	Ko - WACC	12.18	11.91	13.67	15.72	15.70	15.40	15.64	15.42
i	Total Capital Charge	249744.81	393141.33	1207339.14	1609638.99	2167343.54	2413821.04	2567856.61	2606382.14
j	Economic Value Added	201227.19	318768.53	-402298.20	-808321.82	-1066837.67	-1117250.95	-1674145.77	-2188625.26
k	Return on Investment	21.99	21.57	9.12	7.83	7.97	8.27	5.44	2.47
l	Rate of EVA	9.81	9.66	-4.55	-7.89	-7.73	-7.13	-10.20	-12.95

ANNEXURE - IV

STATEMENT SHOWING RELATIONSHIP OF ROI, W.A.C.C. AND EVA

	Year	31.03.1993	31.03.1994	31.03.1995	31.03.1996	31.03.1997	31.03.1998	31.12.1998	31.12.1999
a	Return on Investment	21.99	22.20	9.91	8.86	9.78	9.98	6.96	4.58
b	W.A.C.C.	12.18	11.91	13.67	15.72	15.78	15.40	15.64	15.42
c	Economic Value Added	9.81	10.29	-3.76	-6.86	-6.01	-5.42	-8.68	-10.85
d	Adjusted R.O.I.	21.99	21.57	9.12	7.83	7.97	8.27	5.44	2.47
e	W.A.C.C.	12.18	11.91	13.67	15.72	15.78	15.40	15.64	15.42
f	Adj. E.V.A.	9.81	9.66	-4.56	-7.89	-7.81	-7.13	-10.20	-12.95

Indian Journal of Accounting
Vol. XXXII December 2001

PRESENTATION OF FINANCIAL STATEMENTS

*Dr. Hemendra K. Porwal
*Dr. Sangeeta Porwal

ABSTRACT

There are changes in the pattern of presenting the financial statements all over the world including India. Now, Balance Sheet, Income Statement, Statement of changes in financial position and Statement of changes in Equity are to be presented in tune with the requirements of accounting standards. To make financial statements realistic, PV techniques in accounting measurement be used. We cannot ignore fair value in accounting measurement. The authors have also discussed HRA, Corporate Social performance and green accounting for which no agreed standards have been issued.

Presentation of financial statements from a sole trader, who kept accounts for his own use, has traversed a long path to reporting on a fair value basis during the last two centuries in particular. The accounting knowledge has grown much over this period. Developments in accounting and reporting practices, principles and procedures have to keep pace with the changes in economic, social, legal, political and other environments prevalent in a country or a region. The objectives of preparation and presentation of financial statements should meet the current needs of the users. The primary purpose of this article is to survey in brief, the main developments in accounting and reporting, with emphasis on developing countries, during the century that is just over; more so, those of the past fifty years.

RETROSPECT

Very briefly, though accounting appears to have been practiced since the beginning of recorded history, the idea of double entry was evolved by banks in Europe around seven hundred years ago. Business firms, being mostly proprietary owners, laid greater emphasis on balance sheet during the first half of the nineteenth century, since the owner was greatly interested in knowing his wealth (Capital = Assets Liabilities). Growth of corporations and the entity concept led to a change

*The authors are senior members in the Department of Accountancy and Finance, UNITEN, Malaysia.

in emphasis during the second half of the nineteenth century from balance sheet to income statement. The ownership concept shifted from proprietary ownership to shareholder ownership in the case of companies. The owners were interested in knowing the result of operations of the entity during a period. This resulted in the development of accounting concept of income, the periodicity concept and separate entity postulate. Determination of income led to the development of profit and loss account. The revenue principle, the cost principle and the matching principle began to be applied in the construction of profit and loss statement. Shareholders (owners) had a claim over that part of the profit which was distributed to them in the form of dividend.

This concept, known as 'stewardship accounting (reporting by the management to absentee owners), which came into prominence around the first world war, did not remain all that significant after the second world war. Many business Concerns (in the form of companies and others) sprang up like mushrooms to supply goods and material during world wars, when the demand for goods had increased much more than the normal demand. After the end of second world war around 1945, the additional demand came down heavily, with the result that the companies had to face stiff competition (due to lower demand). As large scale business became more complex, new techniques were developed to face competition. Cost accounting and management accounting developed during this period. Financial statements were no longer regarded as indicators of past business operations and past financial position. Decision usefulness orientation was given by the end of this period. Stewardship accounting went to background and greater emphasis was laid on evolving techniques, practices and systems of accounting to make them more useful in decision making.

There was greater emphasis on preparing and using financial statements as a tool of planning and control by large business enterprises from 1950 and onwards. Various professional bodies established the standard setting agencies to prepare and promulgate accounting Standards for being complied with by the preparers of financial statements to ensure uniformity and comparability. Governments, in developing economies, played effective role by enacting legislation for regulating the preparation of financial statements, and other related issues. Computerised accounting was adopted by enterprises in developing and developed countries.

Among the developed countries, USA and UK initiated steps in early seventies to establish boards/committees for providing guideline to enterprises for preparing financial statements. The Financial Accounting Standard Board (FASB) in USA was set up in 1973. Accounting Standards Committee (ASC) was set up in UK by the institute of Chartered Accountants in England and Wales (ICAEW) at about the

same time. Growth of multinational corporations (MNC's) and consequent globalization led to the establishment of International Accounting Standards Committee (IASC) in 1973 with its head office in London. It has issued 41 core standards. Though the accounting standards are recommendatory in nature, its 128 members (professional bodies) in 91 countries have, by the large, agreed to follow the pattern given in the standards issued by the IAAC. Most developing countries have adopted these standards fully or with some modifications.

Financial Statements

Till recently, only Balance Sheet and Profit and Loss Accounts are prepared. Later on statement of changes in financial position and statement of changes in Equity are also shown. They all till late, were prepared in the form of T accounts. Now, of course, the usual practice is to prepare and present them in a statement in vertical form. Balance Sheet is a statement of financial position at a particular date, usually the closing date. Assets and liabilities are grouped and marshalled in order of permanence or liquidity. USA follows the practice of liquidity. In most developing British Commonwealth countries, the practice of arranging assets and liabilities in order of permanence is followed. First group of assets is 'fixed assets'. This group also includes in it the intangible assets, such as goodwill, patents, trade marks, copy rights. Then 'investments' followed by 'Current assets are shown. Lastly, there is 'miscellaneous expenditure' comprising preliminary expenses, accumulated and current losses, and others. This sort of grouping of assets, though even now followed in some developing countries as required by their companies acts, is not useful for decision making. For example, assets such as goodwill, patents, copy rights and trade marks should be grouped under a separate head, viz. intangible assets. They are not fixed assets, like property, plant and equipment. Again, the last group of assets, 'miscellaneous expenditure', is confusing. Assets comprising this group should be placed in other suitable groups of assets. On the liabilities side, perhaps there is no need on showing capital under heads like authorized, called, subscribed, paid up capital along with other related information. The US practice of showing capital is good, and can be followed. Again, loans are shown as secured and unsecured. They should also be shown as long-term and short-term for better ratio analysis.

Till 1930, a profit and loss account was not required statement in the Companies Act in UK. Later on, it was made a compulsory annual statement in most developing countries. Even now in most developing countries, the practice of 'single step' income statement is followed. All the items of expenditure, as also those of the revenue, are clubbed together. Not much can be made out of this statement, except the net profit earned. The list of broad groups of items to be

shown is given in a schedule of the companies act. This type of profit and loss statement is not useful for control or planning purpose. Even earnings per share is not shown. Multiple step income statement as is practiced by more than two-thirds companies in USA, is more useful for assessing the performance, exercising control and decision making. IAS 1 (Revised) has now given two alternative formats for preparing income statement-show expenses either by nature of by function.

Also known as statement of changes in financial position (SCFP) or funds flow statement for long, presentation of this statement is not compulsory even now in some developing countries. Generally, it was prepared in T form (in some cases, it was prepared in vertical form also). All the items were clubbed together, and not much could be made out of this statement but for changes in some permanent items of assets and liabilities, and increase of decrease in net working capital. As a result of spate of bankruptcies in USA in early eighties, and other reasons, the SCFP was given up for statement of cash flows (SCF). Cases were there, when net working capital was positive, net profit was positive; still the company was declared bankrupt for shortage of cash (liquidity). W. T. Grant company s case of bankruptcy in early eighties is a classic case in this regard.

SCFP was, therefore, substituted by SCF since mid eighties in USA followed later by other developed and developing countries. It is strange, as stated earlier, that in some developing countries, it is not a required annual financial statement. Companies, if they like, can give this statement voluntarily. (Many big companies are now giving this statement in their annual reports.) All items in the cash flow statement are shown under three heads operating activities, financing activities and investing activities. This statement, thus becomes a useful Statement for assessing the net cash flows (positive or negative) from the three activities separately.

Statement of Changes in Equity OR a Statement of Recognized Gains and Losses. The IASC had earlier issued a standard, 'Disclosures of Accounting Policies' IAS 1. This was adopted by many developing countries with/without amendments. Later, the IASC issued IAS 1. (Revised) entitled, 'Presentation of Financial Statements'. Many IASC member countries and professional bodies have adopted IAS 1. (Revised). Malaysia adopted it and issued MASB 1 in 1999. India has, thus far, not issued AS 1 (Revised). It is undergoing due process for its issuance. Either a Statement of changes in Equity or a Statement of Recognized Gains and Losses is to be issued as compulsory annual statement by those who have adopted IAS 1 (Revised) with/without modifications. (See the illustration of these statements on pages 38 and 39 of MASB 1.)

Accounting Policies and Notes. The MASB 1, vide para. 8, page 6 also required that the accounting policies and explanatory notes to the financial statements should describe the following :

(a) The measurement basis (or bases) used in preparing the financial statements, and

(b) Each specific accounting policy that is necessary for proper understanding of the financial statements.

This standard (MASB 1) became operative for financial statements covering periods beginning on or after July 1, 1999.

Statement of Financial Accounting Concepts (SFAC 6) of FASB (USA) introduces the concept of ***comprehensive income*** in addition to earnings. SFAC 5 defined earnings as a measure of performance for a period, and excludes item that are extraneous to that period. It also includes results of entity's incidental or peripheral transactions. SFAC 6 defined comprehensive income as the change in equity (net assets) of an entity during a period from transaction and other events and circumstances from non-owner sources. It includes all changes in equity during a period except those resulting from investments by owners and distribution to owners. The concept of earnings described in SFAC 5 is similar to net income in practice. Comprehensive income is an All-inclusive concept of income. All changes in owner's equity during a period from non-owner sources constitute comprehensive income. SFAS 130, **Reporting Comprehensive Income** (June 1997) requires that all items that are required to be recognized under accounting standards as components of comprehensive income be reported in a financial statement that is displayed with the same prominence as other financial statements.

Present Value (PV) Techniques in Accounting Measurement

To make financial statements economically realistic, serious thought is going on the application of PV techniques in accounting measurement. The income statement based on historical costs does not indicate true earning capacity. A fresh attempt has been made by the FASB (USA). The Board issued a revised exposure draft on the ***'Proposed Statement of Financial Accounting Concepts-Using Cash Flow Information and Present Value in Accounting Measurements'*** in March 1999. It states, 'Most accounting measurements use an observable marketplace-determined amount like cash received or paid, current cost, or current market value. However, accountants often must use estimated future cash flows as a basis for measuring as asset or a liability.'

In developing countries, such as USA, long-lived assets are purchased usually

on a long-term credit contracts. To properly reflect cost, such fixed assets should be accounted for at the PV of the consideration exchanged between buying and selling parties on the date of the deal.

Similarly, the market price of a bond, theoretically, is the PV of its maturity amount plus the PV of its interest payments, both discounted at the market rate of interest. Investors value a bond (long-term liability) at the PV of its future cash flows, which consists of both interest and principal, a better method of writing off the discount/premium on bonds etc. is the effective rate of interest as compared to the straight line method. Theoretically, the proper amount to record notes receivables and other current liabilities is the PV of future cash flows. Using PV future cash flows for measuring assets and liabilities will make the financial statements decision-oriented.

Fair- Value in Accounting Measurement

The FASB s proposed concepts statement (referred to above) provides a framework for using future cash flows as the basis for accounting measurement. It provides general principles governing the use of PV, especially when the among of future cash flows, their timing or both are uncertain. Most developed countries, including Australia, Canada, France, Germany, Japan, New Zealand, five Nordic Countries, UK, USA are agreed to the use of fair value in measuring financial assets and liabilities.

IASC issued IAS 39, **'Financial Instruments : Recognition and Measurement'**, in December 1998, which recommends all financial assets and liabilities to be recognized on the balance sheet, including derivatives at fair value. **Thomas E. Jones**, then IASC chairman said, ***'having worked in a multinational bank for many years, I am convinced that the importance of having a global accounting standard for financial instruments can not be overemphasized. This is a clear case of needing global standards for a global marketplace and when it comes to financial instruments, such as bonds, derivatives and equities, the market truly is a global market.'***

A Joint Working Group (JWG) Comprising countries mentioned above, has published a *draft standard* of an accounting frame work for financial instruments which is founded on the following four basic principles -

- All financial instruments should be recognized in the statement of financial position and measured at fair value.
- Changes in fair value of all financial instruments should be recognized in the statement of financial performance.
- Recognition and derecognition principle.
- Disclosure principle.

The **FASB (USA)** has issued (May-June 2001) **SFAC 7** understanding the issues, where financial assets and liabilities are to be shown at fair value.

The IASC, as stated earlier, has issued 41 core standards. MASB has issued 24 standards and ICAI (India) has, this far, issued 24 standards. Segment reporting, earnings per share, consolidated financial statements are among the important areas covered by the standards issued by rapidly developing countries, such as Malaysia and India. Other areas on which standards have been issued by the IASC, should be covered by these and other countries before long.

Prospect

Human Resource Accounting, Corporate Social Performance and **Green Accounting** are the three important areas on which no agreed standards have been issued. Only some descriptive information is given by some big companies in their annual reports. ***'The dichotomy in accounting between human and non-human capital is fundamental. The latter is recognized as an asset and is, therefore, recorded in the goods and reported in financial statements, whereas the former is totally ignored by the accountants. The definition of wealth as a source of income, inevitably leads to the recognition of human capital as one of several forms of wealth such as money, securities and physical capital.'***

The conventional accounting theory is limited to the recognition of the exchange of goods and services between two or more economic entities. It has, till recently ignored the social effect. Socio-economic accounting aims at measurement and reporting 'the impact of changes between a firm and its social environment'.

The National Association of Accounting (NAA) Committee - **Accounting for Corporate Social Performance** - identified four major areas of social performance : community development, human resources, physical resources and environmental contributions, and product or service contributions. The operations of a business entity have both, economic and social impact. To ignore the reporting of social impact in the financial statements restricts their ability to provide information to users in making informed judgement.

Though not legally compulsory (except in Netherlands and Denmark), many companies in developed and developing countries are voluntarily disclosing information on environmental issues, like pollution of air and water, greenhouse gas emissions, effluents being dumped in rivers and seas. MNC's, like shell, Esso, Nike, Exxon, National Power, Union Carbide, had to face world wide outrage and sanctions of NGO's and consumer groups. Today, responsibility towards people's health and environment can not be ignored by the businesses or they will suffer in terms of profit, goodwill, etc. Case studies have shown that share prices of such

companies have gone down on the stock market. Big companies are now coming out with sustainability reports. Shell produced sustainability report, **People, Planet and Profits** in 1999. A **UN Convention** on climate changes and global warming was held in Marrakesh in October 2001, where details implementing Kyoto Protocol were discussed. It is unfortunate that more than half of the **greenhouse gas emissions** are in the USA, which will lead to global warming in the next few decades. **Ozone depletion** in atmosphere is a serious matter. Countries have to use ozone depleting substances for better climate.

The challenges spelt out in **Agenda 21** of the **First Earth Summit** held in 1992 in Riodejaneiro have to be met. The accountants have an important role to play in tackling environmental issues. They can advise companies on promoting sustainability, reporting and verifying of sustainability report, and on taxation as a means of involving the companies in sustainability developments. They can also organize consultancy services for small and medium industries on green business, energy use, etc. It should however, be borne in mind by the reporting companies that 'just producing narrative reports indefinitely is no good.' There is need for establishing standards for accounting for pollution and sustainability development.

Selected References

Akauntan National, March 2001.

Annual Report of Infosys technologies Limited. 1997-98.

NAA Committee Report, Part I, 1976.

IASC, IAS 1 (Revised), 1997.

IASC, IAS 14 (Revised), 1999.

ICAI, India, AS 17, *Segment Reporting*, October 2000.

ICAI, India, AS 20, *Earnings Per Share*, March 2001.

MASB, Malaysia, MASB 1, *Presentation of Financial Statements*, June 1999.

MASB, Malaysia, MASB 13, *Earnings Per Share*, December 2000.

MASB, Malaysia, MASB 22, ***Segment Reporting***, March 2001.

◆ ◆ ◆

EVA RESEARCH

A Review for Searching the Issues

*Dr. Lalit Gupta
**(Mrs.) Vidhi Bhargava

ABSTRACT

The paper embodies a thorough review of currently ongoing research efforts on the EVA aimed at searching an inventory of issues for research towards both the dimensions of research namely strengthening the tool as well as exploring sound applications. The review follows an approach which may enlighten on both the conceptual complexities and application potentials of the EVA framework of management; hence should serve as a structural source in the designing of researches particularly in the formulation of hypotheses. The areas proposed for research may help considerably in overcoming the major present day problems like responsible governance, HR valuations, performance measurement, retaining the executives and motivating them for integrated strategic decisions in the business and non-business enterprises including the industrial and financial sectors in Indian context.

1. THE PROLOGUE :

EVA as a buzzword and financial phenomenon of the day is now equally popular among the practitioners, academic high-ups, consulting firms and the press. It forms a crucial point of all the branches of commerce and management joining together and demanding interdisciplinary teaching, research and field application. It is viewed as the single tool emerging as a means to tackle several managerial issues simultaneously particularly the integrated strategic decisions that provide wide scope for research in accounting and finance in particular. The attention to the development of this concept may be attributed to the shareholders activism and shift in focus from other parameters to see their corporations as value creators. It is felt that the incessant search for a proper tool to implement the basic tenet of corporate governance that is the creation of shareholder value seems to end with the development of this concept. It is cropping up fast all over as a means to improve upon the EEPP (Efficiency, Effectiveness, Productivity, Profitability) for both the commercial and not for profit entities.

*Asso. Prof. in Acounting, Jai Narayan Vyas University, Jodhpur
**UGC JRF in Accounting, Jai Narayan Vyas University, Jodhpur

2. THE CONCEPT, ITS STRENGTH, POPULARITY AND APPLICATIONS :

EVA simply is residual income (RI) after charging the company for cost of capital in full. It considers the earnings in excess of expected return of the shareholders. EVA is just the amount by which a company s pre-interest but after taxes net operating profit (NOI or NOPAT) exceeds the charge of total capital (both the equity and borrowed).

EVA = NOPAT - Capital Charge

= NOPAT - (WACC * Invested Capital)

Thus, it measures corporate performance in terms of changes in value (i.e. maximization of value in terms of EVA). It is a value-based performance measure and an owner-oriented management tool (Salmi and Virtanen, 2001). It is far from the newest being around age-old economic and accounting concept of residual income and economic profit . In its new incarnation, it is fully refined and developed (also registered by Stern Stewart & Company) as a theoretically sound value-based tool for the measurement of performance, firm valuation, wealth maximization and providing explanation or prediction about share prices, future valuation and several wider applications. Beyond that, this has rather become a complete and powerful system of management by itself, a complete financial framework in particular as also a basis for streamlining the strategic decisions in an integrated order rendering the managerial actions a discipline, offering a standard of governance and also a means to check the agency conflicts for effective HRM.

The popular concept of measurement and a means for maximization of shareholders wealth is known as EVA. It essentially seeks to measure the actual rate of return yes, the risk adjusted actual rate as against the required rate . The EVA approach justifies the minimum risk-adjusted market return a rate that compensates the risk. It must possess a linkage with incentives and constant improvement in EVA is essential. It may be expressed as a variant of an accounting measure of performance with necessary adjustments to income and capital.

Seeing EVA as a new corporate paradigm Stewart observes, powerful new tool/system has gained growing acceptance as the standard of governance. In essence, EVA is a way both to legitimize and institutionalize the running of business. In the EVA framework of management all decisions such as financing, investment, production, marketing, compensation & incentives, HRV & HRM etc. are all streamlined in terms of EVA and tied together.

As noted, it is not something altogether new but the peculiarity is that the old concept of RI is modified and extended to a complete framework and marketed with

a new term the MVA. Although even the MVA could be measured directly but the propounders of EVA (like Stern Stewart & Co.) proposed to measure it through the EVA. Under certain situations the MVA cannot be measured directly or may not possess operationality for managerial purposes. Among all modern measures developed for the value creation or measuring it the EVA basis is found to be relatively easier and cost effective. It is a better measure for strategic reasons also, for example, it can be broken into targets. It is an annual measure as well as lifetime measure with equal soundness, Perhaps no other measure can possess this property. For such reasons the EVA has gained popularity.

3. THE PRESENT STUDY : SCOPE, OBJECTIVE AND METHODOLOGY

Enough efforts have been made to confirm its properties, strengths and applicability claimed by its proponents. Still many of the aspects demand for rigorous studies. Some of the major aspects studied in the research endeavors so far in India or abroad include the following.

1. The empirical relationship between EVA and market value of a firm, for example, Banerjee (2000); Chattopadhyay and Gupta (2001)and further revealing the value drivers, for example, Raul and Sikidar (2000); Sharma (1998).

2. Improving upon the prevalent HR valuation models by incorporating the concept of EVA, for example, Bhaskar Jyoti Bora.

3. Finding evidence for its relevance in providing information to investors or market signals and as a corporate philosophy, for example, Bhattacharya and Phani (2000).

4. Corporate disclosure practices regarding EVA. The exceptional seasoned researchers in this category concentrate on the lapses due to casual approach in current reporting practices leading to dangerous trends, for example, Bhattacharya and Phani, (op.cit).

5. Application in tackling the HR problems, mainly related to the executive level and role in influencing their behavior, for example . Banerjee (2001) discussed as to the current HRM crisis the corporate India is seriously facing.

6. Examining the growth dimensions of corporate firms in India and revealing the facts on the value or wealth creators in the economy, for example, Thenmozhi (1998).

7. Exploring the compatibility of other modern tools of management with the EVA framework of management.

8. Behavioral patterns of the EVA under different sets of conditions or parameters and growth models (strategies), for example, (Salmi and Virtanen, 2001).

The ensuing research work in literature roughly falls into three categories (Salmi and Virtanen, 2001), namely:

1. The literature aimed at presenting, promoting or discussing the EVA concepts in relation to consulting work, partly anecdotal. A few critical views also occur in this category.

2. Empirical research literature measuring the strength of the relation between market returns and EVA compared to the relation between the market returns and the traditional income measures.

3. Literature looking at EVA as a management tool from the point of view of the accounting measurement or as a value-based performance indicator.

The present paper does not embody the results of any direct empirical efforts but dwells upon a broad survey and insightful review of some prominent representative studies brought to light by the researchers. The paper presents summarized views or results (adding due clarifications and emphasis) of the select studies in a manner that may enlighten on both the conceptual aspects and application potentials of EVA framework of accounting (measurement and reporting), finance and management. Thus, the paper constitutes a secondary and indirect empirical experiences of the kind of a broad survey of literature. This review is aimed at gaining knowledge on the issues in EVA Research drawing attention currently, knowing application potentials, indicating the complexities inherent in the concept or its applications, pointing out the research gaps along with the limitations of the tool as noted in the empirical works with a view to making a search for some research issues.

4. REPRESENTATIVE STUDIES : AN ENVISIONING REVIEW

As indicated above, given below is an attempt in brief for an envisioning review of some studies that have come-up in recent years (mostly from our premier institutions) on different aspects of the EVA research for the stated objective of making a search for issues for the forthcoming researches.

(a) Linkage Between EVA and MV :

The following observations may be quite useful from Banerjee (2000), on this dimension of EVA Research. The study provides a sound conceptual insight for further applications.

Adopting EVA philosophy forces a company to find ingenious ways to do more

with less capital. So long as a company is earning a return on investments in excess of the cost of investment, there is no limit to growth. EVA is a modified version of shareholder value (SHV) theory which keeps the shareholders at the top in analyzing economic performance of a firm . It is believed that market value (MV) of a firm, at any given moment is the summation of beginning invested capital and present value of future stream of expected EVAs. Unless EVA is fully integrated into a company linking the whole management and strategies including executive compensation to improvement in EVA, it would fail if applied only as a performance measure in isolation. EVA, thus, is not merely a financial computation to be reported at the end of the year but is a part of the fully integrated management system.

The computational methodology of EVA is not unique. At least four forms of EVA are proposed namely : basic, disclosed, tailored and true EVAs. Stewart identified 120 adjustments to accounting results based on GAAP. It is argued that these adjustments would convert accounting profit to economic profit. Stewart has introduced another measure of shareholder value called MVA. MVA tells us how much value the market add over the book value of invested capital. MVA, therefore, denotes the confidence of the capital market on the performance of a company. The relationship is expressed as :

MVA = MV of Equity + MV of Debt (BV of Equity + BV of Debt)

MVA = PV of Future Stream of EVAs.

From the above expressions, we can draw

MV = BV of Invested Capital + PV of Future stream of EVAs.

EVA is useful in performance evaluation because it allows to dissect a company s market value into known and unknown (expected) components. The present value of future stream of EVAs actually has two components present value of current EVAs and present value of expected EVA improvements over the current level. The first component coupled with current book value of equity is called Current Operational Value (COV) and the second component is called Future Growth Value (FGV). As market value of a firm is essentially futuristic, it largely depends on FGV of a firm. FGV, in turn, depends on continuous EVA improvement. If a company just maintains EVA (without any improvement), its NOPAT will provide a cost of capital return on current operational value and no return on FGV. Hence, EVA improvement is a precondition for growth in market value.

The relationship between five independent variables and dependent variable (the MVA) was tested in 9 industries over a period of 6 years for 200 firms. The five independent variables selected for the study are : EVA; Adjusted RONW; EPS; Capital

Productivity & Labor Productivity. The study failed to conclude convincingly about the superiority of EVA over other independent variables in explaining MVA. The study, however, singled out EVA as the common significant explanatory variable across industries. The study could only show that of the 5 independent variables, EVA is the better of the lot.

The objective of the study has been to examine whether the MV of a firm is best predicted by expected EVAs. The MV of a firm is always futuristic. It captures information about a firm not yet operationally materialized and hence not present in its financial statements. Stewart coined the term MVA to measure shareholder value.

It may also be useful to note here the comments and findings of Chattopadhyay and Gupta (2001). A point is sometimes made that EVA is not the ultimate measure of corporate success and that the most reliable measure of management s long-term success in adding value is well known as MVA. But studies have shown that no financial measures correlates better with MVA growth than EVA does (op. cit, 2001, p.3). In fine, it can be said that, at least for HLL, EVA has not proved itself a better measure of business strengths. No contradictory results have been arrived at from the degree of associations and the trends of EVA and market capitalization (MC). However, no conclusions for the companies in general could be drawn from the case study. (op. cit. 2001, p.7). These conclusions compare with another small scale study in Indian context by Malhotra (2001,p 32) which reveals, there is no indication whatsoever that EVA is conveying any statistically significant signals different from traditional performance indicators . The so called namely innovated concept of EVA has not correlated very well with the shareholders value creation.

(b) New Models for HR Valuation Using the EVA

The research efforts of Bora may be referred to so as to realize the application of EVA in this area. The version of this study goes as below :

Much delicacies are present in evaluating and measuring the contributions of human participation in the overall results of a firm , like arbitrary allocations. HR Valuation is closely linked with the process of appraisal of performance (of the firm and employees). The appraisal now becomes a part of managerial strategy. In this age of technological revolution, the brain power is going to play vital roles like creating new technologies.

In the current researches the attempts are being made to remove the drawbacks that all models of HRV put forth so far suffer. The basis of modification is the EVA concept. The attempt is to establish some justified relation in between the cost and goals and also in achievement of excellence in performance in excess of the par (we may view it as a form of EVA in the context of HRM) as an improvement in

Lev & Swartz Model which is a widely used model in India. This model rests on the present value of future benefits to be earned by employees in the career in their homogeneous groups based on age and hierarchy. A well designed compensation scheme is an essential prerequisite of employee motivation, team building and efficiency. The concept of EVA integrated with the concept of HRA or HRM can have a significant bearing in this regard as both the EVA and HRA attempt to grow the business and aim at improving upon the efficiency.

The suggested model states that all the employee compensations (and probable costs in their regard) are capitalized first. The EVA is then anticipated for a given period to be added as the appreciation to the human capital. Efforts are also being made to evolve similar models suitable for organizations not for profit like universities, non-trading or professional concerns like artists.

(c) EVA : In Search of Relevance and Reporting in India

The study of Bhattacharya and Phani (2000) may be referred to fruitfully in this category. Few others may also be taken into account to complement our insightful review.

The study examines whether EVA is a superior performance measure both for corporate reporting and for internal governance. It relies on studies abroad for certain considerations and concludes: EVA does not provide information to investors, it can be adopted as a corporate governance philosophy of motivating and educating employees about the importance (awakening) of cost of capital and value appreciation. This would lead to direct all efforts in creating shareholder value. The fact of casual reporting not only by companies but the financial press also in India gets substantiated in other studies as well. In most of the articles in Indian newspapers and magzines, the EVA figures calculated for Indian companies are actually RI and not EVA (Chattopadhyay and Gupta, 2001). The study (Bhattacharya and Phani, 2000) also supports that the EVA reporting does not convey significant signal to the capital market. Of course, according to them, the concept is based on sound theoretical foundations, however involves significant subjectivity which reduces its informative value; although Thenmozhi (1998) reports about the claim of Capitaline (data publishers for Indian companies) that the EVA calculations as in their package possess 80% accuracy in relation to Stern Stewart EVA formula. The front runner (Stern Stewart & Co.) in eulogizing the EVA, recommends nearly 160 adjustments to the accounting figures for realistic estimate of EVA. Most enterprises do not maintain in-depth data required for these adjustments and it is not accessible to outsiders. Out of these 160 odd adjustments around 15 adjustments are considered crucial by die hard EVA proponents. This requirement has been scaled down to

around 5 to 6 adjustments. Companies are now using EVA internally as a performance measure for improving efficiency, productivity that would lead to enhancement of shareholder value. However, a dangerous trend has set in, to use EVA casually for external reporting. This should be stalled as such reporting might mislead users.

It is known that the agency theory argues unless managers are monitored constantly, they act in self interest which might be at variance with the interest of residual claimants. The variance can be reduced only through added costs of monitoring or designing appropriate incentive structures (such costs are called the agency costs in the management literature).

The researchers examine the effectiveness of EVA in improving the performance of a firm as a whole, as a measure of performance (managers) , goal congruence and trade-off between the precision in measurement and its cost of measurement. The performance of a firm gets reflected in its valuation by the capital market. Valuation reflects : (a) perception of the current performance and (b) their expectation about its future performance. A measurement should be able to incorporate the direction and measurement of future growth of the firm. The success depends on the alignment of the various conflicting interest of the stakeholders towards a common goal. EVA is now being used as a means for this purpose. It may be underlined that EVA is regarded as a value based owner oriented system of management (see Salmi and Virtanen, 2001).

Therefore, it is appropriate to examine the EVA as a performance measure and as a corporate philosophy.

(d) The Current HRM Crisis in India : Searching Remedy in EVA

Banerjee, (2001) may be referred to as a prominent recent study in this context.

The HR problem at the top level in terms of executives attrition has affected almost every industry in India during last one year perhaps the present foremost crisis of HRM in the corporate India. The turnover at the executive level has suddenly risen and companies are forced to think seriously about forming some kind of association. The corporate India has awakened to the new threat of retaining talents. Employees are no longer satisfied with fixed pay. They now want to participate in the growth and prosperity of the organization they serve. Long-term incentive rewards are intended to develop and retain strong and efficient management through share ownership and incentive rewards that recognize future performance (i.e. the outcome of decisions taken currently). A significant portion of senior executives compensation should depend on value created by them for shareholders.

The underlying objective of corporate incentive plan should be to, provide strong incentive to increase shareholder value. The annual award should be based on both individual and corporate performance against both the qualitative and quantitative measures. The parameters on which the scheme is based should be carefully drawn so that the agency conflict is avoided. The study has examined the compensation practices currently prevailing in Indian companies both the traditional and modern bonus plan linked to EVA drawing an insight from the practices and researches abroad as also the famous 10 K Report submitted to SEC in the USA. Further he has analyzed hypothetically that under traditional plans based on target sales achievement how the company remains loser from the side of both the superior performer as well as the poor performer. He has examined the 10 big companies from the paints and varnish industry both the cash bonus and stock options based on EVA. One of the points which must attract a reader is the issue, how the EVA plan aims at influencing favorably the behavior of both the superior performer and poor performer simultaneously in the interest of shareholders .

(e) On the Corporate Growth Dimensions, Management Attitudes and Revealing Wealth Creators :

A representative study that concentrates on these aspects is Thenmozhi (1999).

Considering ROI and making decisions on it alone is similar to assessing products on the basis of gross margin on sales. The magnitude of operations is important. High return is a lot easier to achieve with low amount of capital than with the large amount of capital. The problem of size and dimension of growth and the related management policy or attitude is worth examining . This all is done at what cost to the shareholders wealth needs to be probed into. Thenmozhi (1999) appears to deal with it and reveals surprising facts about the role of leading corporations in the creation of value in the economy. It finds that IRR and ROI provide us additional information and although all decisions are possible without them but EVA and NPV must be in the commanding role. One way to reduce risk is to build an analysis of shareholder value into selection of corporate strategy is the EVA analysis. Several value based management tools were known during 1980s , the EVA has created a new interest in them. Both Banerjee (1998) and Thenmozhi (1999) bring to light the Indian experiences as to how the agency conflicts result into unwarranted corporate growth to the destruction of shareholder value. Thenmozhi(1999) showed that out of 28 top companies only six were found creating value during 1996-99 despite reporting a very attractive picture in terms of EPS, RONW etc. The study expressed the necessity of probing into whether bigness is a virtue for the Indian corporate sector . The EVA was found working wonders when adopted by some leading

companies. Hence, EVA becomes a standard of governance and Gupta (2001) suggests in the context of regulating the governance . More stringent monitoring and disclosures on the financial strategies, agency conflicts are essential with a provision for prominent disclosure of EVA and facts on takeover or divestment decisions even if under pipeline (Gupta, 2001 p. 83 point 9).

(f) Empirical Experiences on Behavioral Patterns of the EVA :

A prominent study on the behavioral patterns that comes to the knowledge of the authors is Salmi and Virtanen (2001) from Finland.

The concept is evaluated and compared with traditional performance measures within a controlled simulation framework. A few major observations by them through different parts of the study may be summarized as below :

(i) A central question concerning EVA is how sensitive this management tool is to the changes in various components, management policies and external economic factors.

(ii) Despite the unambiguous theoretical definition, applying EVA even in its pure, theoretical format is not straight forward. Measuring the profit of the firm and measuring the component of the cost of capital is problematic both in theory and practice.

(iii) Pfeiffer (2000) considers mathematically EVA v/s DCF methods for resolving internal agency problem in decentralized decision-making. Besides the theoretical discussion understanding is needed about the numerical behavior of the EVA under different conditions and about EVA s numerical relationship to the accounting measures.

(iv) The partly conflicting results in the earlier literature make it difficult to get a grasp of EVA s behavior vis- -vis the traditional measures. The generic research task of this paper has been to observe and assess how the EVA measure behaves under different, realistic financial conditions and compare it to the simultaneous behavior of the more traditional profitability indicators.

(v) Methodologically the paper demonstrates the advantages of using controlled simulation approach in financial research. The data is capable of generating different business situations for observation at will to facilitate a plausible scrutiny of the relevant cases. The second important advantage is that the true, economic profit of a firm is easily measured which is not possible from financial statements The model involves three main constituents, the input parameters, the actual model with the model of variables, and the output produced by the model. The financial time-series produced by the model make-up its primary output.

(vi) In the finance literature one of the most involved issues is the assessment of cost of capital. In particular, assessing the cost of equity is a difficult question both in practice and theory. The simulation uses two alternative ways of defining the cost of equity one as the external parameter and other is the firm s IRR.

(vii) EVA is a measure that is expressed in absolute, monetary terms. Nevertheless, it will be interesting to compare the behavior of a relative EVA to the firm s ROE & ROI. The relative EVA is just the return on equity less the cost of equity.

Some major conclusions presented in the study may be extracted as follows :

(i) EVA is very sensitive to its cost of equity component but unexpectedly insensitive to its cost of debt component under regular conditions. EVA is found much more unstable than the traditional ROI and directly related to the return on equity measures.

(ii) To study the effect of the cost of components, the behavior of EVA and the select financial ratios is simulated under different profitability situations. It is evident from simulation results that the cost of loans has very little effect on the EVA of a viable firm. It is readily seen that EVA stays insensitive to the cost of loans, but on the other hand the absolute level of EVA is significantly affected.

(iii) Under realistic (with respect to the firm s profitability) required returns (cost of equity) the loan interest rate has little effect on the EVA s behavior until the cost of loans approaches the firm s profitability. This insensitivity can be considered a somewhat unforeseen result with respect to the intuitive expectations of EVA s behavior. On the other hand, as is expected, EVA behaves in a linear fashion with respect to the cost of equity.

(iv) The (absolute) EVA figure and its variability are strongly affected by the firm s growth policy choices because of leverage effects.

(v) The results have also a bearing on the debate of the relative merits of the value-based measures as against the properties of traditional measures.

(a) Even under regular economic circumstances (the relative)EVA is much more unstable than the ROI measures. These findings subject to doubt the potential claims on the EVA s supremacy over the other traditional accounting measures.

(b) Traditional financial ratios are commonly used for distress prediction. EVA does not have incremental value in this predicting.

(g) Trend of EVA Studies in India: Some Observations

A scan over the academic business (Proceedings, 2001) took place very recently at the 24th Annual Conference of the IAA may be pertinent since a session was devoted to the EVA. About forty papers were contributed on this theme which reflect the current state and trend of EVA studies in India. The majority of papers dealt with brought conceptual or introductory aspects. However few papers were based on some case studies or empirical findings which may be noticed as a beginning of the positive change in the nature of participation at the annual conference of the IAA as against the past years. The broad issues covered there at include: EVA and Corporate Financial performance, its relationship with the market value or capitalization and comparison with the traditional measures or modern measures like cash value added. A brief mention of the following contributions may be purposeful:

(a) Gowda and Mariyappa make an initial effort to trace the theoretical compatibility and linkage of ABC with the EVA without any actual application.

(b) Reddy and Satish examine the disclosure practices related to EVA as followed by corporations in India. A critical focus would bring to our notice that this examination of disclosure practices confines to a simple quantitative analysis such as the extent of disclosure or counting of corporations following it. In a research, the reporting should be more a matter of reliability and implications of the process adopted which demands a meticulous scanning of facts in each individual case particularly in the matter of EVA like Chattopadhaya and Phani (2000) reveals about the Infosys, a lead taking firm in EVA reporting. For about a decade a considerable proportion of accounting research efforts in India have gone to the issue of reporting or disclosure, the policies and standards but the observation by Gupta(1995) still seems to hold significantly and demand attention. Important aspect of financial reporting is the formulation and disclosure of policies. Researchers in India have not touched the earlier half of this statement .....Only the disclosure policies have been attempted due to inherent expedience. (p xv) Information content is a function of both the choice of appropriate practices and disclosure rather than depending on ..... it should be the question of quality of information and the adecacy of disclosure alone ..... the accounting quality indices may be prepared. (p 242-243)

(c) Mondal and Gupta submit a collection of some useful and interesting

comments made by leading researchers in the development of the concept along with some empirical findings.

5. REVIEWED OBSERVATIONS AND LIMITATIONS OF THE TOOL :

The foregoing review and extractions of some representative studies from the ongoing researches suggest that EVA research is a quite popular subject in the current financial research. The review gives rise to the following major observations :

(i) Several new management accounting and decision tools have been developed in recent years both in business & consulting practice and academic research. Of them all, perhaps the EVA has attracted the highest attention.

(ii) The studies collectively contribute significantly in enriching our understanding on various conceptual and application dimensions. Studies not only bring to light the soundness, strengths and scope for wider application of the tool but also the drawbacks and inherent complexities both the conceptual and in applications.

(iii) The leading researches in EVA world over have extended to very wide range of applications The efforts begin with enriching the concept as a tool in general for strategic and other decisions, and go up to its utility under specific situations or for different industries and typical problem areas, for example, EVA for banks : value creation, risk management and profitability measure (Uyemura, Kentor and Pettit, 1996). There are attempts to explore the integration of EVA with other modern tools of management for enhanced mutual capabilities such as activity- based cost management and the EVA, for example, Anctil RM et.el.(1998). As noted earlier, some initial efforts of this kind have begun to appear in Indian context also.

We find that in methodological terms also the EVA research offers a wide scope. Methodologically the studies have come from simplest ones to depending on sophisticated techniques The EVA research has called upon with greater emphasis than ever before for disciplines of accounting & finance, management , economics and mathematics & statistics to come in partnership for research. Undoubtedly, some of the researches in EVA in India are quite sound and have unearthed the revealing facts. Of course, they are mostly from our premier institutions like IIMs and IITs. Both the university departments and professional bodies and persons including executives and consulting services in India have shown little interest as compared to their counterparts abroad. The EVA research so far in India has not been as much varied in terms of the conceptual and application issues involved as well as the methodologies adopted. Evidences on the trend of inter-disciplinary efforts are yet to be witnessed in India.

In order to take up a search for issues of research, it is desirable to glance over the key points emerging in the review followed by other drawbacks of the tool noticed in the literature. It may be noted that the number of accounting adjustments suggested to arrive at true economic profit and economic capital committed to business range between 120 to 164 and odd. Around 15 of them are considered crucial by a group of proponents which is further scaled down significantly (5 to 6) in recent years. Banerjee (2000) reports that only four adjustments called equity equivalents are found of relevance and emphasized in the US context. Even the computational methodology is not unique. As regards the status of empirical evidences on EVA, Banerjee (2000) reports :

The empirical research of academics to date on this subject is limited. The results are mixed. Stewart observed that the relationship between EVA and MVA is highly correlated among US companies. Lehn & Makhija (1996) observed that both measures (EVA & MVA) correlate positively with stock returns and that the correlation is slightly better with EVA than that with traditional measures. On the predictive power of EVA in explaining or predicting shareholder wealth, several researchers observed that EVA is better correlated with MVA or shareholder value than other traditional parameters. However, there are adverse findings too. Odd and Chen (1996) found that return on assets explained stock returns better than EVA. Hamel (1997) was critical about the superiority of EVA. He opined that EVA reveals little about a company s share of new wealth creation.

Bhattcharya and Phani (2000) also express similar opinion. In the process, EVA is being bandied about with utmost impunity by all and sundry, which includes the popular press The academic world in its turn has come up with various empirical studies. Currently the empirical evidence is split almost half way. The studies summarized in our review also indicate the contradicting results. Even the results of a same study are contradictory on different counts.

The major drawbacks of EVA as noticed may be summarized as below:

The calculation of EVA and its variables is not free from complexities; involves the cost of generating and publishing the data base; ignores inflation; as EVA is expressed in absolute terms it is affected by investments in new assets hence will turn to be low or negative for new firms although they may possess good prospects or their current ROI may be better than others; it is undoubtedly a sound philosophy still depends on financial statements despite so many adjustments; no doubt it enhances the utility of annual reports but the dependent values like beta can t be conclusively established that is the element of estimates or subjectivity is not eliminated; at occasions it may give misleading results due to its shortcomings like wrong periodization; while handling excessive capital problems this may result in making managers milking their existing assets and discouraging from investments

for future that means instead of seeking for stars , managers have an incentive to aim at low .

The above limitations reduce the informative value of EVA. Companies find it very useful but the challenge is how to measure and apply the tool. Sharma (1998) draws attention to a very serious flaw in the tool. Laying high emphasis upon improvement in earnings while minimizing the cost of funds creates atmosphere for maximizing the return on capital employed and also the shareholders equity. However, it creates certain unique problems. A real challenge today is to prepare for meeting the competition from MNCs. Any misplaced emphasis on EVA may therefore, distract their attention from the real issue.

6. EMERGING ISSUES OF RESEARCH

Using the insight obtained, an attempt is made here below to prepare an inventory of issues for research in EVA:

- Revealing if industries really create wealth for the nation, its nature and extent.
- Identifying EVA drivers active in different industries, for different divisions or processes prevalent in any industry, for functional activities and levels of management. Not only finding the agents or drivers but also how to segregate the overall EVA of the firm so as to associate it with these constituents of an organization.
- Testing the validity and reliability of value drivers identified over time.
- Surveying and classifying the different ways the Indian executives have evolved and relied on for improving the EVA under different conditions and their comparison. Examining their theoretical soundness and operationality.
- Examining the strengths and drawbacks of traditional vs. modern measures including EVA for performance measurement and strategic decisions for different industries on different counts namely :
  - a. Whether it serves the purpose of motivating managers to behave like owners and pay attention to shareholder value.
  - b. Whether it helps investors and add to the information content value.
  - c. Its implications as a corporate philosophy on governance.
- Examining the extent of availability of information required for EVA analysis and judging its dependability in the context of different forms of EVA: and interpretational implication of various forms of EVA
- Examining the significance of adjustments to accounting figures proposed from different quarters in the process of this analysis with a view to effective scaling down under our conditions.

- Whether the adjustments really help in countering any dysfunctional or sub-optimal behavior of the management. Which of these adjustments are crucial for different stakeholders and users of information like internal or external.
- Finding the strength of EVA as a variable to explain stock-prices for different industry groups like skill-driven vs. others, manufacturing (capital, industrial or consumer goods) vs. service industries.
- Exploring the inter-disciplinary researches in strategic finance, integrating the decisions and solving HRVor HRM issues, checking agency costs and problems like conglomerates and cross-subsidisation, goal congruence and examining the potentials of EVA in this respect under our socio-eco-techno-legal environment.
- Measuring the impact of EVA framework and its likely applicability under the arrangement of divisional performance and varying transfer-pricing policies, the kind of segment reporting required.
- Exploring the integrated applicability of EVA with the ABC management and other similar modern tools of planning and control.
- Implications of EVA framework on productivity and its comparison with other tools of influencing productivity.
- The impact on EVA of growth choices has been noticed and studied. Besides the policy choice, the stages of growth of a firm also matter. This in turn depends on the nature of the industry and other factors. Typically in certain firms the growth does not result into commensurate increase in capital i.e. change in size. Hence the impact be studied with respect to both the choices and stages of growth for different industries.
- Finding the behavioral patterns of EVA under varying sets of conditions and impact of different components of the EVA function.
- Probing into the quality of EVA reporting in terms of the reliability and the process adopted by the reporting firms.
- Examining the issues in theory of reporting in relation with the reporting of EVA like cost effective information, problem of information overload and trade-off between accepted attributes of reporting.

7. THE EPILOGUE

It is hoped that this exercise of extraction and review of current trend of research in EVA would serve as a structural source in the designing of forthcoming researches particularly in the formulation of hypotheses. This may help in enhancing the capabilities of teaching, research and field applications both in internal management and decisions by externals including the reporting for them. The

inventory of issues attempted may not be exhaustive but may go a long way in fully enriching and exploiting the powerful tool to the benefit of all concerned groups. What is needed to achieve this aim is the creation of an environment for team and theme based researches, which is absent in accounting research in India.

REFERENCES

Banerjee Ashok, "Agency Cost & Free Cash Flows: The Stakeholders Stake.", *The Chartered Accountant*, Nov. 1998, pp. 42-47.

---------- "Linkage Between EVA and MV: An Analysis"; *Vikalpa* (IIMA), July-Sept. 2000, pp-23-36.

---------- "An EVA Linked Model Executive Compensation"; *The Chartered Accountant* (ICAI), May 2001, pp.14-21.

Bhattacharya Ashish K. & Phani BV, "Economic Value Added: In Search of Relevance"; *Decision* (IIM Calcutta); July-Dec.2000; pp. 25-54.

Bora BJ, "A New Model for HR Valuation Using the Concept of EVA", *Corporate Accounting and Financial Analysis*, ed. by Pramanik and Guruswamy, Kanishka Pub. Chapter 16.

Chattapodhyay AK and Gupta A, "Linkage Between Market Capitalization and EVA A Study with Reference to HLL", *IJA*, June 2001, Vol. XXXII, p.p. 1-7.

Gupta Lalit, "Accounting Policies: Theory and Practice", published with the UGC Grant, Books Treasure, Jodhpur 1995.

---------- "New Focus on Corporate Governance"; *Indian Management* (AIMA); Feb.2001, pp. 78-84.

Malhotra, Meenakshi, "Relevance of EVA to Measuring Corporate Success", *Journal of Accounting & Finance* (RDA, Jaipur) 15:1, March 2001pp27-34

Proceedings;(Published Abstracts of the Papers) of the 24th IAA Conference held at Tirupati, Sept 13-14, 2001.

Raul RK and Sikidar S., "Shareholders Value Its Measurement by Accounting Tools and Value Drivers: An Empirical Analysis", *IJA*, Vol XXXI June 2000, pp. 28-36.

Salmi T. and Virtanen I., "A Simulation Analysis of the Trendy Owner-Oriented Management Tool"; *Acta Wasaensia* No. 90, 2001, Vaasa Finland.

Sharma KR, "Economic Value Added Accounting" *IJA*, Vol.XXIX, Dec. 1998, pp. 13-20

Themozhi M, "EVA as a Measure of Corporate Performance"; *The Indian Journal of Commerce*, Oct.-Dec.1998, pp. 72-88.

◆ ◆ ◆

Indian Journal of Accounting
Vol. XXXII December 2001

NEW AREAS OF CORPORATE SOCIAL REPORTING

*Dr. Abdul Naser I. Nour
**Shri A.K. Pramanik

ABSTRACT

The business enterprises are accountable towards the society which provides the scarce resources. Therefore, social responsibility of the enterprises has been stressed and social reporting practices has also been developed. There has been increasing demand on the profession regarding measurement of social costs and benefits and to disclose them through annual reports. Social reporting refers the measurement and communication of information about the impact of an entiting activities on the society. At present, the existing corporate social reporting practices are inadequate and need much improvement. In this paper, an attempt has been made to identify the new areas of corporate social reporting.

INTRODUCTION

The technology of an economic system imposes a structure on its society which not only determines its economic activities but also influences its social relationships and well being. Therefore, a measure limited to economic consequences is inadequate as an appraisal of the cause effect relationships of the total system, it neglects the social effects.[1] The area of accounting has traditionally being only associated with credits and debits. There is a need to recognize accounting for social responsibility. It is important to realize that accountants have special abilities that are needed if contemporary society is going to solve its ever growing problems.[2] To a large extent, the accounting profession has been alerted to the need for research in accounting for social goals and is ready to accept the challenge. There have been increasing demands the profession measurement of social costs and benefits which have previously been considered to the unmeasurable. Many terms are currently used for social accounting such as social responsibility accounting, Socioeconomic accounting, Socio audit, Social information, Social disclosure, and social reporting. There terms are used as synonymous. It aims at measuring (either in monetary or nonmonetary units)

*Head of the Department of Accountancy, College of Administrative and Financial Sciences Al-Isra University-Amman-Jordan.
**Head of the Department of Commerce, Bhatter College, Dantan, Midnapore (West Bengal) India.

unfavourable and favourable effects of such activities both on the entity and/or those affected society by the firm. It is highly concerned with the social, human and environmental constraints on organizational behaviour. Thus, social accounting implies the measurement and reporting of information concerning the impact of a concern and its activities on society.

The Problem of the Study

The operations and activities of the corporate system impose a socio-economic structure on society which not only influences the economic well-being of society. The traditional financial system is designed to collect, process and report financial results and operating statistics with no regard to the social performance of a business enterprise, corporate social reporting.

Objectives of the Study

The main objective of the study is to identify the newer areas of corporate social reporting.

The Hypothesis

The existing corporate social reporting practices are inadequate and need much improvement and that measuring and reporting on the corporate social performance will considerably help in uplifting social well being and improving corporate effectiveness.

Meaning of Corporate Social Reporting

The corporate sector in developing countries has been reporting financial and non financial information to the public from its very inception. With the passage of time society became more conscious of its expectation from the corporate sector. The corporate sector also realized that, as it is a social organ and uses social resources, it is responsible to society. In consequence it was gradually accepted that the corporate should report such information to the public (society) as tells them how far the corporations have fulfilled their social responsibilities. While fulfilling social responsibilities corporations have to bear certain social costs, though they also received benefits from society. The fulfillment of social responsibilities is measured in terms of social costs and social benefits.[3] Thus it is clear that corporation of today have to be responsible to various stake holders like share holders, customers, employee, environment, society and creditors.

Knowingly or unknowingly every company uses social resources. For some resources or facilities companies pay money, but then there are so many other resources which are used by them gratis. It is society which has to bear the cost

of such resources. For example, the cloud of smoke emitted by a factory pollutes the air that one breaths and thereby becomes the cause of a good many other diseases. All these expenses are born by society, not by companies, and they are known as a social costs. The main social costs and benefits emanating from the existence of companies are as described below :

Social Costs

1. **Air Pollution** : During the production process a Company sends out smoke which pollutes the air. This pollution deeply affects property values, human health and plant and animal life.

2. **Water Pollution** : Factories drain off into reverse the dirty water containing poisonous chemicals and, as the polluted river water is used in many ways, it causes so many diseases in human beings as well as animals.

3. **Noise Pollution** : The operation of factories creates noise which becomes the cause of problems or disease of all sorts in the people residing near them.

4. **Impairment of Human Resources** : The use of human resources results in injuries, occupational diseases etc. It also causes social losses owing to the employment of children and young persons.

5. **Depletion and Destruction of Animal Wealth** : In many companies animal wealth is also used, which causes the depletion and destruction of animal wealth.

6. **Premature Depletion of Energy Resources** : Great energy is consumed during the production process and it causes the depletion of energy resources.

7. **Soil Erosion and Deforestation** : Commercial use of agricultural and results in deforestation and soil erosion.

8. **Monopoly and Social Losses** : Monopoly greatly effects consumers, they have to bear the cost of monopoly.

SOCIAL BENEFITS

1. Creating employment for people through their operations.

2. Providing jobs for the weaker sections of society on a preferential basis.

3. Going into relatively little profitable areas which are important to national health such as exporting in order to earn foreign currency or developing indigenous products for import substitution.

4. Forgoing or postponing certain opportunities in order to preserve scarce natural resources.

5. Providing opportunities for consumers to have a wide choice by developing a variety of products to satisfy varying tests and temperaments.

6. Adopting such pricing policies as favour certain weaker sections of society.

7. Making conscious efforts to encourage fair competition.

8. Creating good townships for employers.

9. Providing certain facilities and developing better technical skill for employees.

10. Offering fair wages and good working conditions.

Areas of Corporate Social Reporting

The National Association of Accountants' committee on accounting for corporate social reporting has identified the following four major areas of corporate social performance, Community Development, Human Resources, Physical Resources and Environmental Contributions, Product or Service Contribution.

(A) Community Development

Community development includes such areas of social activities as primarily benefit the general public or community. Here 'community' refers to something more than the population of the specific geographic area in which a company has plants and offices. Community development may be studied under the following subheads :

(i) **General Philanthropy** : This includes educational support, health and community welfare activities, cultural activities, recreational activities and other such activities as are for the general welfare of the public.

(ii) **Health Services** : Support is provided by companies for healthcare-facilities and services aimed at preventing and curing diseases.

(iii) **Housing** : This comprises construction of dwelling houses, providing finance for housing and improving the living condition of employees by making available various facilities in their houses.

(iv) **Education** : Educational facilities are provided for the public and for the wards of employees free of charge or at a concessional rate.

(v) **Food Programme** : It is aimed at providing food grains and refreshment and meals for the employees.

(vi) **Community Planning and Development** : It includes urban planning and crime prevention.

(vii) **Personal and Business Problems** : Help is given in resolving problems related to the physically handicapped, child care and disputes of employees.

(viii) **Transportation** : Transportation is provided gratis or at a concessional rate.

(B) **Human Resources**

The employees of a concern constitute its human resources. The company has to perform certain activities for their well-being and development. They are as follows :

(i) **Employment** : Creation of job opportunities and equal jobs for all persons.

(ii) **Remuneration** : Providing good remuneration and benefits. It also includes perquisites.

(iii) **Good Working Conditions** : Providing a safe, Pleasant and healthy working environment.

(iv) **Training and Development** : Providing programmes for all employees to increases their working efficiency and morale and achieve job satisfaction and thereby raising per capita productivity.

(v) **Career Development** : Providing all employees with equal opportunities for career development, which includes promotion and incentives to work more.

(vi) **Communication** : Creating opportunities for proper communication which plays an important role in the development of human resources and improves performance.

(C) **Physical Resources and Environmental Contributions**

Physical resources and environmental contributions include such activities as are directed towards stemming the tide of environmental deterioration.

'Environment' includes geographical environment as well as psychological environment. Hence one has to take note of the following facts while making an appraisal of the above area :

(i) **Pollution** : When one thinks of pollution, it is air, water, noise and soil pollutions that come to mind, but more important than all this is the pollution of human psychology which creates tension emanating from dissatisfaction with job opportunities, promotions, irregular payment of salaries, working conditions and employee-employer relations. Psychological pollution may prove to be a greater menace than environmental pollution.

(ii) **Use of Scarce Social Resources** : Social resources include land, human

beings. Finance, natural resources like forests, minerals, animals etc. and various facilities developed by society such as roads, hospitals, post offices, banks etc.

(iii) **Aesthetics** : It has to do with the location of a building and facilities in agreement with the prevailing conditions so as to create a pleasant atmosphere.

(D) Product and Service Contributions

Product and service contributions are directly related with customers and their satisfaction with the activities of an organization. Again 'Product' and 'Service' are highly related to quality, warranty provisions, product safety, advertisement, packing etc.

(i) **Product Quality** : The quality of a product should be of a good order confirming to the standards. It should be well controlled so that customers may reasonably rely on the product.

(ii) **Products Safety** : Safety in handling a product should be insured through good designing and packing. The product should also be enduring.

(iii) **Consumer Education** : The consumer should be made aware of the characteristics and qualities of a product.

(iv) **Warranty provisions** : The consumer should be given assurance of the implied warranties through timely recalls, repairs and replacements.

(v) **Constructive Research** : Research should be continued to improve the product and its value.

Brummet identifies the following five areas of corporate social reporting :

1. Net Profit Contribution
2. Human Resource Contribution
3. Public Contribution
4. Environment Contribution
5. Product or service Contribution.[4]

The areas of corporate social reporting identified by the NAA and IR. Brummet are the same except for net profit contribution.

The area of community development identified by the NAA was in no way different from what was identified by Brummet in the name of public contribution.

Human resource, physical resource and environment contributions and product and service contribution were common in both the cases. The term 'Contribution' as used by Brummet refers to costs and benefits associated with an organization's activities. Here the net profit contribution are of social reporting will be discussed.

Net Profit Contribution

No business can survive without earning adequate profits. It is profit which stimulates an organization to contribute to social welfare. In other words, profit objectives and social objectives are highly correlated. If an organization suffers losses, then it becomes a burden on society and fails to think of social welfare. Likewise if an organization ignores social objectives it fails to earn profits in the long run. It is simply because of this that an organization has to balance the maximization of social objectives with that of profit objectives.

Chakraborti points out the following areas of corporate social reporting :

1. Relations with the public/society
2. Relations with the consumers
3. Relations with the suppliers
4. Relations with the employees
5. Relations with nature or the natural environment.[5]

The areas pointed out by Chakraborti are similar to those identified by the NAA and Brummet except for relations with suppliers.

Explaining the relations with suppliers, Chakraborti descants on 'the extent to which big business is helpful to the small and medium industry'. He also discuss the credit enjoyed by a company with its suppliers and the credit given by the company to its purchasers. He suggests calculating the creditors' turnover ration and a comparison of it with the debtors' turnover ratio.

We suggested some additional areas of corporate social reporting and they are :

1. **Profit Contribution and Financial Soundness** : An organisation has to earn profit in order to survive and serve the community. An organisation earning no profit is like a sick person who has to be taken care of by society. Profit earning and financial soundness are two different things. A concern must be financially sound in the short term as well as in the long term. It must be in a position to meet its obligations when they fall due. For this purpose, the financial resources and assets of the organisation have to be used properly. The order issued under Section

227 (4A) of a Companies Act, 1956 requires the auditor to report on some of the matters related to the best use of financial resources and assets.

2. **Relations with the Providers of Capital** : The providers of capital may be classified as (i) owners and (ii) lenders. The owners include equity share holders and preference share holders while the lenders comprise debenture holders, financial institutions like banks, insurance companies, financial corporations etc.

3. **Relations with External Parties** : The external parties are suppliers of goods and services, consumers and government agencies like tax and excise departments.

4. **Relations with the Competing Units and Allied Industries** : A company has to have cordial relations with the competing units in the same industry or outside the industry. Not only this, it has to maintain relations with so many types of concerns of the same level.

5. **Development of Nationalism and Spiritual Values** : An organisation plays an important role in developing national and spiritual value which are largely responsible for social welfare.

6. **Efficiency and Effectiveness** : 'Efficiency' refers to economy whereas 'Effectiveness' has to do with the obtaining of desired results. The combination of efficiency and effectiveness is productivity. If a concern is productive it will add to social welfare, otherwise it will be a drag on society.

Thus the hypothesis of the study stands acceptable.

REFERENCES

1. Mobley. S.C., The challenges of Socio-Economic Accounting, *Accounting Review*, Oct., p. 767.
2. Siegel. Joel, 'An overview of Social Responsibility' *The Management Accounting*, (Sep. 1996), p. 729.
3. Lal Jawahar, *Financial Accounting*, First Edition, Wheeler Publishing Co. Ltd., Delhi, 1996, p. 497.
4. Brumment. I.R., as quoted by M.W.E. Glautiar and B. Underdown in Accounting Theory and Practice (London : Pitman Publishing Ltd., 1986, p. 986).
5. Chakraborti. A.M., 'Quantification of the Social Reporting Data and its Objective Assessment by the Social Auditors', *Chartered Secretary*, March, 1978, p. 986.

◆ ◆ ◆

ECONOMIC VALUE ADDED REPORTING IN INDIA

*Dr. Y. V. Reddy
**R. Satish.

ABSTRACT

EVA is superior to accounting profits as a measure of value creation because it recognizes the cost of capital. EVA could bring back the lost focus on Economic Surplus from the current emphasis on accounting profit. EVA and Market value added (MVA) are two different approaches based on different variables , but both are used to evaluate the shareholders value created by the company. There is no Accounting standard in India which makes disclosure of EVA mandatory to all listed companies. Some companies have already made EVA a part of their annual report. The present study covers 125 Public Ltd companies annual report for a period of five years from 1995-1996 to 1999-2000. This paper examines the various disclosure practices related to EVA as followed by Indian public Ltd companies In its annual report.

EVA, a financial management too], helps to evaluate the real profitability of a company. Just earning profits is not sufficient- a business should generate sufficient profits to cover its cost of capital and have a surplus left over for growth. Any profit earned over and above the cost of capital is Economic value added. Effective use of capital is the key to creating shareholders value. EVA thus represents value creation for shareholders. A negative EVA points to wealth erosion.

In the 1970s or even earlier, residual income did not get wide publicity and it was not regarded as the prime performance measure by a great number of companies. However, of late, the number of companies adopting EVA is increasing rapidly (Nuelle 1999, Wallace 1997, and Economist 1997). There are several value-based measures, such as Cash Flow Return On Investment, Cash Value Added, Shareholder Value Added, and Economic Value Added. Among these, EVA is the most widely used and popular, probably because it happens to be an easier concept compared to others and above all it is cost effective (M. Thenmozhi, 1999).

A sample of 125 public Ltd companies from various industries in India have been selected. Further, for the purpose of analysis, these companies annual reports

*Reader in commerce, Goa University, Goa-403206.
**Head, Dept. of Accountancy, Govt. College, Quepem, Goa-403705.

have been examined for the last five years, i.e. from 1995-96 to 1999-2000. The present research paper is an attempt to investigate the EVA reporting practices in India, with the help of the annual report of Indian companies.

A. CONCEPT OF EVA

Stewart defines EVA as the surplus of net operating profit after taxes (NOPAT) after adjusting the capital cost. The concept of residual income did not gain as much popularity as EVA, may be because EVA was marketed with a concept of Market Value Added and it did offer a theoretically sound link to market valuation. The concept behind EVA is that shareholders must earn a return that compensates the risk taken. In other words, equity capital has to earn at least the same return as risky investment at equity markets. If that is not done, then there is no real profit made and, actually, the company operates at a loss from the point of view of the shareholders (M. Thenmozhi, 1999).

EVA = Net operating profit after tax (NOPAT)- cost of capital employed (COCE), where:

NOPAT = profit after tax (Net of extraordinary items) and before interest (Net of tax); and

COCE = Weighted average cost of capital (%) x Average capital employed.

Positive EVA implies that the company has managed to create shareholder value. If EVA is zero, then this should be treated as the shareholders have earned a return that compensates the risk. Negative EVA shows that the company has destroyed the shareholder. The attractiveness of the EVA lies in its use of cash flow and cost of capital that are the actual determinants of the value of the firm.

B. WHAT DOES EVA SHOW ?

EVA is the residual income after charging the company for the cost of capital provided by lenders and shareholders. It represents the value added to the shareholders by generating operating profits in excess of the cost of capital employed in the business. EVA indicates the impact on shareholders wealth. Whereas, other traditional performance measures such as, IRR, ROI, Return on capital employed, return on assets, Return on net assets, etc. indicates the rate of return. ROI and other traditional performance measures ignore the definite requirement that the rate of return should be at least as high as the cost of capital. Sometimes, ROI ignores projects yielding more than the cost of capital just because the return happens to be less than their current return. The above concept can be well understand with the help of an example, Let us suppose that a group has two companies, 'ANU' Ltd and 'BINU' Ltd.

	ANU Ltd	BINU Ltd
Cost of capital	12%	12%
ROI	18%	10%

The group aims at maximizing only ROI. In this case, Anu Ltd will reject all the projects that yield a return below 18%; Whereas, Binu Ltd will accept all the projects with a yield have more than 10% (even if it is as low as 11%). In the above example, both the companies will maximize its ROI, at the same time, it decreases the shareholders value. To create and increase the shareholder value, Anu Ltd should have accepted all the projects with a return of over 12%. But Binu Ltd should not accept any projects below 12%, because this would destroy shareholder value.

EVA will increase if :

a) Operating profits can be made to grow without employing more capital, i.e. Greater efficiency.

b) Additional capital is invested in projects that return more than the cost of obtaining new capital, i.e. profitable growth,

c) Capital is curtailed in activities that do not cover the cost of capital, i.e. liquidate unproductive capital.

d) Reducing cost of capital, which means employing more of debt, as debt is cheaper than equity or preference capital. i.e. cost control.

C. EVA and MVA

The theory of EVA states that earning a return greater than the cost of capital increases the shareholders value. For listed companies, Stewart defined another method that assesses whether the company has created shareholder value that is MARKET VALUE ADDED (MVA) method.

As per the MVA approach, if the total market value of a company is more than the amount of capital invested in it, the company has managed to create shareholders value. When the case is opposite, then the company has destroyed shareholder value.

MVA = company s total market value- capital invested.

In other words,

MVA = market value of equity - book value of equity.

From the above two paragraphs one can understand that EVA and MVA are two different approaches used to find out the shareholder value created by a company. EVA is basically concentrating on NOPAT, whereas MVA is considering market value of equity.

In one of the previous research studies on EVA, it was stated that positive EVA means, positive MVA, and vice versa. This need not to be necessarily true, because there is various number of factors that influence market value of equity. EVA may be just one of these factors. So one can t always conclude that positive EVA means, positive MVA and vice versa.

Therefore, EVA and MVA are two different approaches based on different variables, but both are used to evaluate the shareholder value created by a company.

The following are some of the special feature compared to other performance measures:

D. FUNCTIONS OF EVA

The main functions of EVA are:

a) As a performance measure, and

b) As a corporate philosophy.

a. *EVA AS A PERFORMANCE MEASURE*

There is a continuous endeavor to develop a single measure that captures the overall performance, yet which is easy to calculate and is also economical. In order to achieve goal congruence, manager s compensation is often linked with the performance of the firm. Investors decide whether to invest in a firm, or to continue with the firm or to exit from it, only on the basis of overall performance of the firm. The only suitable solution to the above stated problems is 'EVA'.

ROI, ROE and ROA gives us the rate of return earned by the firm with respect to capital invested in the firm. The most important limitation of these measures are derived from limitations inherent in the measurement of accounting profit. But these limitations are also associated with EVA. The difference lies only in the fact that the cost of equity is also factored to arrive at the residual income.

EVA emphasizes that in order to justify investments in the long run they have to produce at least a return that covers the cost of capital as otherwise the shareholders would be better off investing elsewhere. This approach includes that the organization tries to operate without excess capital. While the accountants are familiar with the concept of residual value, its application in economic value

measurement as a means of evaluating underlying business performance is nothing short of an overhaul of traditional accounting concepts.

b. EVA AS A CORPORATE PHILOSOPHY

EVA, when implemented at every level of managerial decision making process, encourages managers to deploy resources only on value enhancing activities and to align the interests of shareholders with managers. This involves two things- one is linking managerial compensation package with EVA and second is to inculcate the culture of evaluating every action from the viewpoint that it should generate EVA. The ultimate out come should be enhancement in the shareholders wealth measured by the capital market.

The simplicity of EVA in communicating the very fundamental principle that only the generation of surplus over cost of capital can enhance shareholders wealth makes it a management technique superior to other planning and control techniques.

EVA should be adopted as a management culture within the organization rather than as a project, There are more than 300 corporates worldwide that have adapted EVA as a corporate philosophy (A.K. Bhattacharyya & B.V. Phani, 2000). Many of these organizations are successful multinationals like Coca-Cola, Bausch & Lomb, Briggs & Stratton and Herman Miller. The advantage of EVA over other similar tools is that it improves business literacy. Business literacy is the effort of the management to convey to all the employees the fact that for any activity to be value enhancing, the return generated should be greater than the cost of capital employed for that activity. Use of EVA improves financial corporate governance in the sense that it motivates the manager to get rid of value destructive activities and to invest only in those projects that are expected to enhance shareholders value. Using EVA or residual income measures for incentive compensation leads to :

i. Improvement in operating efficiency by increasing asset turnover,

ii. Disposal of selected assets, which have failed in earning adequate returns.

iii. Reduction of new investments, which will have inadequate returns as compared to the overall cost of capital, and

iv. More share repurchases.

Teitelbaum observed that *EVA* has moved from buzzword to financial phenomenon. As a *performance measure*, as an analytic tool, and as a *management discipline*, EVA is cropping up all over.

E. PROBLEMS

The following are some of the problems associated with the calculation of EVA.

1. Stern Stewart & co recommends nearly 164 adjustments to the accounting figures for a realistic estimate of EVA. These adjustments truly complicate the calculation of EVA.
2. These 164 adjustments require in depth data. This involves additional costs.
3. The increase in the number of adjustments increase the subjectivity involved in measuring EVA (Damodaran, 1998).
4. It is very difficult to quantify all the value enhancement activities of a firm without involving a lot of subjective estimates.
5. It does not remove the limitations of the accounting profit that forms the basis for computing EVA.
6. It is difficult to measure exactly the risk -free rate of return, beta and risk premium.
7. There is no statutory regulation to monitor the EVA disclosure practices in India.

F. EVA REPORTING IN INDIA

In India, the entry of foreign institutional investors in the early 90s saw the concept of shareholder value gaining ground. Some companies have already made EVA a part of their annual report. Indian companies have started using EVA for improving internal governance.

At Parke Davis, the EVA rose from Rs. 8.04 crores in the financial year 1996 to Rs. 15.42 crores in 2000.

At Hindustan Lever Ltd, the EVA has increased to Rs. 694 crores in 1999 from Rs. 26 crores in 1991.

The EVA of Satyam computer service Ltd, has Increased from Rs. 4.08 crores in 1996 to Rs. 83.32 crores in 2000, as per their annual report.

At Nicholas Piramal India Ltd, the EVA rose from Rs. 7.6 crores in the financial year 1998 to Rs 14.9 crores in 2000.

As per the annual report of Linc pen & Plastics Ltd, the EVA has been a mere Rs. 0.41 crore in the financial year 2000.

The above are some of the examples of EVA disclosure in India.

The present study reveals that :

1. Out of 125 companies annual reports studied, only 12 companies have disclosed EVA.

2. Only one company has disclosed the EVA before the financial statements in the annual report.

3. 11 companies have disclosed EVA after the financial statements in the annual report.

4. The disclosure of EVA is something new to the Indian investors. Therefore, seven companies have disclosed all necessary theoretical information about EVA, before showing calculation of EVA.

5. 9 companies have disclosed the formula, which they have adopted in calculating EVA.

6. Only one company has disclosed EVA data for a period of the last 10 years.

7. 8 companies have disclosed EVA data for a period of 5 years, 2 (two) companies have disclosed EVA data for a period of 2 years, and only one company has disclosed EVA data for a period of one year.

8. All 12 (twelve) companies have disclosed EVA in the form of tables.

9. Only 4 companies have disclosed EVA in the form of graphs, in addition to tables.

10. The presentation of EVA data is different from company to company.

CONCLUSION

There is no Accounting Standard, which makes disclosure of EVA mandatory to all the listed companies. EVA calculation involves significant subjectivity and this reduces its informative value. Casual use of EVA for external reporting might mislead users of the annual report. However, in spite of these drawbacks, EVA is a powerful new management tool that has gained growing international acceptance as the standard of corporate governance. In essence, EVA is a way both to legitimize and to institutionalize the running of a business in accordance with basic macroeconomic and corporate finance principles. When effectively applied and implemented it provides an excellent tool for strategic planning, investment appraisal, pricing decisions and a basis for incentive compensation.

REFERENCES

Alfred Rappoport; 'Creating shareholder value' - The new standard for business performance, *The Free Press*, 1986.

Al Ebrhar and G. Bennett Stewart III; 'The EVA Revolution' *Journal of Applied Corporate Finance*, vol. 12. No .2, summer 1999.

Annual reports of 125 Indian Public Ltd companies from 1996 to 2000.

Asish K. Bhattacharyya and Phani B.V, 'EVA- In search of relevance', *Decision* vol. 27, No.2. July-December 2000.

Anand, Manoj, Ajay Garg and Asha Arora, 'EVA, Business performance measure of shareholder value', *The Management Accountant*. May 1999. pp 351-356.

Biddle, G. Bwen, R. M., Wallace, J.S, 'Abstract of Evidence on the relative and incremental information content of EVA, residual income, earnings and operating cash flow', University Of Washington, USA, 1996.

Chandra, Subash, 'Corporate reporting practices- In Public and Private sectors', Deep & Deep. New Delhi, 1992.

Deveshwar, Y.C., 'Managing shareholders value', *Business Today*, September 7-21, p 158, 1999.

Kroll, Karen. M, 'EVA and creating value' - *Industry week*, vol. 49. April 7, 1997, pp 102-109.

Lehn, K., and Makhija, A.K, 'EVA and MVA-as performance measures and signals for strategic change', *Strategy and Leadership*, vol. 24, May/June 1996, pp. 34-38.

Stewart, G. Bennet, 'The Quit for value; EVA', Management Guide, Harper business, New York, 1990.

Thenmozhi. M. 'EVA - as a measure of corporate performance', - *The Indian Journal of Commerce*, October-December 1999. pp. 72-85.

◆ ◆ ◆

PROFIT IDENTITY RELATIONSHIP

*Dr. M.D. Mohite
**Dr. S.O. Sonar
***Shri V.M. Mohite

ABSTRACT

The Urban Co-operative Banks have made a notable progress in meeting the credit mix needs of fixed income earners, weaker sections of society, traders and small businessmen. Therefore an attempt is made with the help of structured framework of Profit Identity Relationship to examine their financial performance. The profit Identity Relationship approach has revealed that the profitability of Urban Co-operative Banks has declined due to increase in burden ratio and decline in spread ratio.

The financial performance analysis for any Organisation has become crucial from the point of view of management, investors creditors and financial institutions. The financial data is recorded into profit and loss account and the balance sheet. So, the financial analyst with the help of standard RATIOS probe into financial analysis. But in this research paper an attempt is made to use a structured frame work of profit identify relationship. Commercially, and industrially Gujarat is one of the most developed states in India. Particularly Gujarat is a leading state for the development of all types of co-operatives. Among the co-operatives urban co-operative banks have a strong base and they have made notable progress in meeting the credit mix needs of fixed income earners, persons of weaker sections of the society, traders, small businessmen etc. We have selected fifteen urban cooperative banks from selected ten districts of Gujarat for the time frame study of ten years i.e. 1989-90 to 1998-99. For the purpose of accounting analysis certain key accounting variables have been identified, mainly to develop appropriate relationship Identities of Profit, Table I, depicts the key profit factors and their relationship identities.

*Professor, Head & Dean, Faculty of Commerce, M.S.U., Baroda.
**Faculty, National Institute of Co-operative Management, Gandhinagar.
***Faculty, Department of Accounting and Financial Management, Faculty of Commerce, M.S.U., Baroda.

Table-I

Key Profit Factors and Relationship Identities

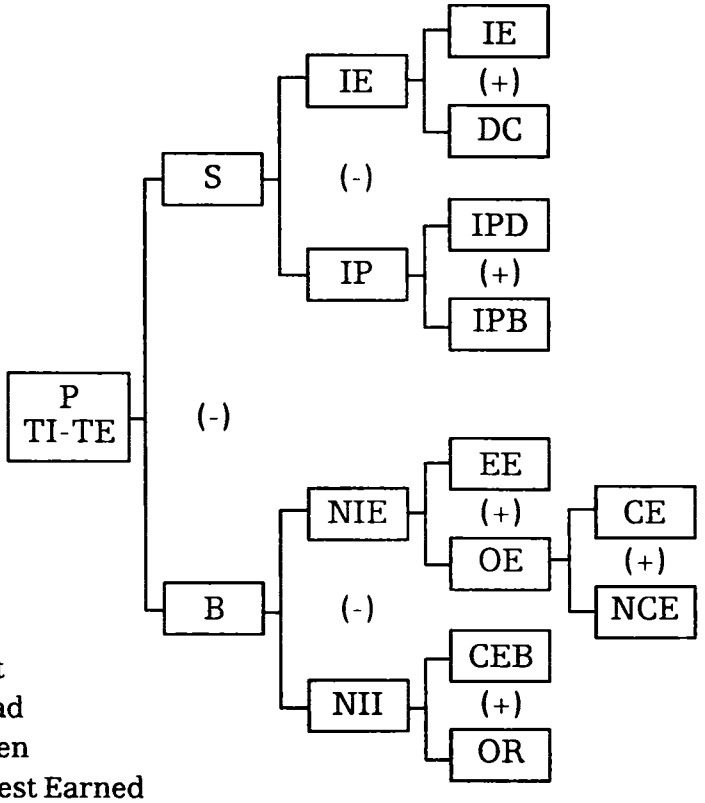

P	=	Profit
S	=	Spread
B	=	Burden
IE	=	Interest Earned
IP	=	Interest Paid
NIE	=	Non Interest Expenses
NII	=	Non Interest Income
DC	=	Discount Charges
IPD	=	Interest Paid on Deposit
IPB	=	Interest Paid on Borrowings
EE	=	Establishment Expenses
OE	=	Other Expenses
CEB	=	Commission Exchange Brokerage
OR	=	Other Receipts
CE	=	Current Expenses
NCE	=	Non Current Expenses
(-)	=	Minus
(+)	=	Plus

The key accounting factors and their functional relationship identities can be more specifically understood from the Table-II.

Table-II

Functional Relationships of Bank s Profitability Variables

Relationship Identities	Income	Expenses	Difference	Symbols
I	I. Interest Income	E. Interest Expenses	Surplus (I-E)	S
II	D. Non-Interest Income	F. Non-Interest Expenses	Burden (F-D)	B
III	J. Total Income (J = I + D)	K. Total Expenses (K = E + F)	Net Profit (J-K)	P

In the above structured frame work the spread and burden play key roles. They determine the profitability of the urban cooperative banks. The profitability can be increased by increasing the spread and by reducing the burden. A further division of the components of spread and burden provide the following profit equation.

$$P = (A - D) - (M + O) - B$$

Where,

A = Total interest income

D = Total interest expenses

M = Total manpower expenses

O = Total other expenses

B = Total Non-interest income

Each of the above factor is related to the volume of business. The volume of business is denoted by V. The coefficient of each of the factors given above are represented by

P = P/V

D = D/V

M = M/V

O = O/V

B = B/V

After, explaining a theoretical structure of an accounting research technique, let us proceed further for its application for the profitability analysis of the urban co-operative banks for the period under study.

The profitability is obtained by profit divided by the volume of business. The profitability performance of the urban cooperative banks in South Gujarat Region and Central Region remained relatively better. The profitability of urban co-operative banks taken together has declined from 1.54 per cent in 1989-90 to 1.00 per cent in 1998-99. The behaviour of profitability ratio depend upon the behaviour of spread ratio and burden ratio. Therefore, an attempt is further made to analyse the spread ratio and burden ratio.

Spread Ratio

Table III reveals the behaviour of spread ratio. The behaviour of spread ratio of an individual bank as well as all banks taken together have behaved inconsistently. The spread ratio of all banks taken together has declined from 3.40 Per cent in 1989-90 to 2.97 Per cent in 1998-99. For an every individual bank the spread ratio has also recorded fall for the period under study.

Behaviour of Burden Ratio

Table IV shows the behaviour of the burden ratio. The burden ratio of the UCBs in South Gujarat. Region, North Gujarat Region, and Saurashtra Region have recorded rise. But the UCBs in Central Region have registered a decline in their burden ratio. The burden ratio of all UCBs together has increased from 1.86 Per cent in 1989-90 to 1.97 Per cent in 1998-99.

Behaviour of Non-Interest Income Ratio (NIIR)

Table V highlights the behaviour of the NIIR. The NIIR at micro and macro levels recorded substantial decline for the period under study. The NIIR has declined from 0.46 Per cent in 1989-90 to 0.20 Per cent in 1998-99.

Behaviour of Non-Interest Expense Ratio (NIER)

The table VI shows the behaviour of NIER of UCBs for the selected time frame study. The behaviour of NIER of UCBs at, micro and macro has show an inconsistent behaviour for the period under study. The NIER of UCBs in South Gujarat Region, North Gujarat Region and Saurashtra Region have recorded increase. However, the NIER of all the UCBs taken together has shown a little decline i.e. from 2.32 Per cent in 1989-90 to 2.18 Per cent in 1998-99.

The profitability analysis of UCBs, in Gujarat is under taken with the help of profit identify relationship approach. The profitability of UCBs has been examined with the help of spread ratio and burden ratio. The profitability of UCBs is Gujarat has declined due to high burden ratio and low spread ratio. The higher burden ratio of the UCBs in Gujarat is on account of relatively higher increase in NIER as compared

Table-III
INTEREST SURPLUS (SPREAD) RATIO OF URBAN CO-OPERATIVE BANKS

Sr. No.	Name of the Banks	1989-90	1990-91	1991-92	1992-93	1993-94	1994-95	1995-96	1996-97	1997-98	1998-99
1	Kalupur UCB	2.15	2.15	1.61	1.93	1.90	2.84	2.93	3.51	3.42	2.05
2.	Bhagyodaya UCB	3.11	2.90	2.78	4.36	3.85	3.83	3.82	3.65	3.48	2.69
3.	Sabarmati UCB	3.74	4.71	3.79	5.45	4.94	5.48	4.46	3.33	2.78	2.30
4.	Gandhinagar UCB	5.90	4.69	5.13	6.45	6.47	6.44	5.77	5.49	4.29	3.98
5.	Natapur UCB	3.02	3.19	3.50	4.50	3.67	3.92	3.07	3.69	2.86	2.19
	Interest Surlus Ratio of UCBs in Central Gujarat Region	3.58	3.53	3.36	4.54	4.17	4.50	4.01	3.93	3.37	2.64
6.	Surat Po ples' UCB	4.14	4.09	7.27	5.73	5.12	4.83	5.43	6.49	4.81	4.12
7.	Surat Textile Traders UCB	5.10	3.89	4.24	5.00	4.70	3.54	3.46	3.68	3.23	3.36
8.	Sarvoday UCB	2.42	3.47	1.13	2.41	1.49	2.55	2.30	2.44	2.45	2.51
9.	Anyonya UCB	2.43	2.87	2.70	3.56	3.50	3.30	2.64	2.67	2.34	2.02
	int. Surplus Ratio of UCBs in South Gujarat Region	3.52	3.58	3.84	4.18	3.70	3.56	3.46	3.82	3.21	3.00
10.	Mehasana UCB	2.90	3.17	2.67	3.29	2.84	3.40	3.49	2.02	1.82	1.51
11.	Himmatnagar UCB	2.76	3.23	2.80	3.90	3.82	3.73	3.74	3.71	4.06	3.36
1 2.	Kukarwada UCB	2.43	3.03	1.69	3.14	3.19	3.99	3.67	3.41	2.42	2.97
13.	Godhra UCB	2.34	2.18	2.38	2.69	1.97	1.42	2.08	2.31	2.57	2.36
	Int. Surplus Ratio of UCBs North Gujarat Region	2.61	2.90	2.38	3.25	2.95	3.14	3.24	2.86	2.72	2.55
14.	Rajkot UCB	4.64	4.10	3.52	4.98	4.46	4.81	5.13	6.07	7.04	5.75
15.	Veraval Peoples UCB	3.90	4.15	3.89	4.17	4.01	4.04	4.17	3.97	3.81	3.39
	lnt. Surplus Ratio of UCBs in Sourashtra Reqion	4.27	4.13	3.70	4.57	4.23	4.43	4.65	5.02	5.43	4.57
	Int. Surplus Ratio of UCBs in Gujarat State	3.40	3.46	3.27	4.10	3.73	3.88	3.74	3.76	3.43	2.97

$$\text{INTEREST SURPLUS RATIO} = \frac{\text{SPREAD}}{\text{VOLUME OF BUSINESS}} \times 100$$

Table-IV
BURDEN RATIO OF URBAN CO-OPERATIVE BANKS

Sr. No.	Name of the Banks	1989-90	1990-91	1991-92	1992-93	1993-94	1994-95	1995-96	1996-97	1997-98	1998-99
1	Kalupur UCB	1.36	1.35	0.92	1.30	1.14	1.70	1.65	1.96	1.85	1.07
2.	Bhagyodaya UCB	2.31	2.05	1.94	2.82	2.37	2.01	1.82	2.12	1.83	1.50
3.	Sabarmati UCB	2.70	3.31	2.55	3.55	3.12	3.49	3.05	2.22	1.71	1.35
4.	Gandhinagar UCB	4.20	3.36	3.73	4.04	5.52	5.21	4.23	3.87	2.88	2.83
5.	Natapur UCB	1.05	1.20	1.01	1.44	1.26	1.32	1.13	1.21	0.86	0.83
	Load Ratio of UCBs in Central Gujarat Region	2.32	2.26	2.03	2.81	2.68	2.75	2.38	2.27	1.83	1.52
6	Surat Peoples UCB	2.32	2.33	3.98	3.54	3.24	3.04	3.47	4.01	3.26	2.94
7	Surat Textile Traders UCB	1.85	1.73	1.54	2.28	2.53	2.01	2.06	2.26	2.06	1.94
8	Sarvodaya UCB	-0.54	0.17	-0.63	-0.23	-0.48	1.44	0.29	0.57	1.24	1.14
9.	Anyonya UCB	1.71	2.06	1.36	1.83	1.84	1.83	1.63	1.55	1.55	1.71
	Load Ratio of UCBs in South Gujarat Region	1.33	1..57	1.56	1.86	1.78	2.08	1.86	2.10	2.04	1.93
10.	Mehasana UCB	0.21	1.09	0.98	1.10	0.87	1.07	1.48	0.80	0.64	0.52
11.	Himmatnagar UCB	1.34	1.67	1.20	2.13	2.19	2.24	2.48	2.58	2.93	2.36
12.	Kukarwada UCB	1.16	1.61	1.17	1.67	1.81	2.57	2.41	2.38	1.50	2.13
13.	Godhra UCB	1.64	1.45	1.67	1.92	1.30	0.98	1.36	1.41	1.73	1.64
	Load Ratio of UC Bs in North Gujarat Region	1.09	1.46	1.26	1.71	1.54	1.71	1.93	1.79	1.70	1.66
14.	Rajkot UCB	4.19	3.66	3.18	4.53	4.02	4.36	4.71	5.64	6.54	5.17
15.	Veraval Peoples UCB	2.39	2.49	2.24	3.02	3.34	2.87	2.69	2.48	2.37	2.40
	Load Ratio of UCBs in Sourashtra Region	3.29	3.08	2.71	3.77	3.68	3.61	3.70	4.06	4.45	3.78
	load Ratio of UCBs in Gujarat State	1.86	1.97	1.79	2.39	2.27	2.41	2.30	2.34	2.20	1.97

$$\text{BURDEN RATIO} = \frac{\text{BURDEN}}{\text{VOLUME OF BUSINESS}} \times 100$$

Table-V
NON-INTEREST INCOME RATIO (NIIR) OF URBAN CO-OPERATIVE BANKS

Sr. No.	Name of the Banks	1989-90	1990-91	1991-92	1992-93	1993-94	1994-95	1995-96	1996-97	1997-98	1998-99
1.	Kalupur UCB	0.34	0.40	0.33	0 45	0.27	0.35	0.25	0 3-6	0.33	0.27
2.	Bhagyodaya UCB	037	0.39	0.38	0.39	0.50	0.50	0.47	028	0.25	0.22
3.	Sabarmati UCB	0.69	1.17	0.59	0.96	1.42	1.39	0.44	033	0.29	0.24
4.	Gandhinaqar UCB	0.23	0.43	0.25	0.27	0.24	0.34	0.33	0.22	0.22	0.23
5.	Natapur UCB	0.09	0.08	0.06	0.08	0.14	0.17	0.17	0.14	0.12	0.09
	Non-int. Income Ratio of UCBs in Central Gujarat Region	0.32	0.49	0.32	0.43	0.52	0.55	0.33	0.26	0.24	0.21
6.	Surat Peoples UCB	0.68	0.20	0.14	0.15	0.23	0.31	0.33	0.16	0.32	0.16
7.	Surat Textile Traders UCB	0.71	0.69	0.57	0.62	0.64	0.69	0.57	0.43	0.38	0.37
8.	Sarvodaya UCB	1.72	1.24	1.70	1.67	2.66	1.73	1.83	1.31	0.45	0.21
9.	Anyonya UCB	0.10	0.14	0.09	0.13	0.21	0. 02	0 37	0.22	0.21	0.1 8
	Non-int. Income Ratio of UCBs in South Gujarat Region	0.81	0.57	0.63	0.64	0.94	0.73	0.78	0.53	0.34	0.23
10.	Mehasana UCB	0.33	0.18	0.20	0.12	0.10	0.12	0.16	0.06	0.07	0.10
11.	Himmatnagar UCB	0.17	0.16	0.13	0.18	0.18	0.19	0.17	0.14	0.1 5	0.11
12.	Kukarwada UCB	0.89	0.56	0.15	0.18	0.22	0.29	0.15	0.10	0.13	0.16
13.	Godhra UCB	0.24	0.13	0.12	0.14	0.56	0.80	0.69	0.73	0. 21	0. 23
	Non-int. Income Ratio of UCBs in North Gujarat Region	0.41	0.26	0.15	0.15	0.26	0.35	0.29	0.26	0.14	0.1 5
10.	Rajkot UCB	0.17	0.15	0.11	0.14	0.16	0.20	0.19	0.18	0.18	0.21
11.	Veraval Peopl es UCB	0.23	0.30	0.28	0.36	0.39	0.36	0.33	0.38	0.33	0.28
	Non-int. Income Ratio of UCBs in Sourashtra Region	0.20	0.23	0.20	0.25	0.27	0.28	0.26	0.28	0.26	0.24
	Non-int. IN COME Ratio of UCBs in Gu arat State	0.46	0.41	0.34	0.39	0.53	0.51	0.43	0.34	0.24	0.20

$$\text{NON-INTEREST INCOME RATIO} = \frac{\text{NON-INTEREST INCOME}}{\text{VOLUME OF BUSINESS}} \times 100$$

Table-VI
NON-INTEREST EXPENSE RATIO (NIER) OF URBAN CO-OPERATIVE BANKS

Sr. No.	Name of the Banks	1989-90	1990-91	1991-92	1992-93	1993-94	1994-95	1995-96	1996-97	1997-98	1998-99
1	Kalupur UCB	1.70	1.75	1.25	1.75	1.41	2.05	1.90	2.32	2.16	1.34
2.	Bhagyodaya UCB	2.67	2.44	2.32	3.20	2.87	2.51	2.28	2.40	2.08	1.72
3.	Sabarmati UCB	3.39	4.49	3.14	4.51	4.54	4.89	3.50	2.54	2.00	1.59
4.	Gandhinagar UCB	4.43	3.79	3.37	5.20	5.76	5.55	4.57	4.09	3.11	3.06
5.	Natapur UCB	1.14	1.28	1.07	1.52	1.40	1.49	1.30	1.34	0.98	0.92
	Non-int. Expenses Ratio of UCBs in Central Gujarat Region	2.66	2.75	2.35	3.24	3.20	3.30	2.71	2.54	2.07	1.73
6.	Surat Peoples UCB	2.99	2.52	4.12	3.70	3.47	3.35	3.80	4.17	3.58	3.24
7.	Surat Textile Traders UCB	2.56	2.42	2.12	2.90	3.17	2.69	2.64	2.69	2.44	2.31
8.	Sarvodaya UCB	1.20	1.42	1.07	1.44	2.17	3.17	2.12	1.88	1.69	1.35
9.	Anyonya UCB	1.81	2.20	1.45	1.96	2.05	2.03	1.99	1.77	1.79	1.89
	Non-int. Expenses Ratio of UCBs in South Gujarat Region	2.14	2.14	2.19	2.50	2.72	2.81	2.64	2.63	2.38	2.20
10.	Mehasana UCB	0.54	1.27	1.18	1.21	0.97	1.19	1.64	0.85	0.71	0.62
11.	Himmatnagar UCB	1.50	1.83	1.33	2.31	2.37	2.43	2.64	2.72	3.08	2.46
12.	Kukarwada UCB	2.05	2.17	1.31	1.86	2.04	2.86	2.57	2.48	1.63	2.29
13.	Godhra UCB	1.88	1.58	1.79	2.06	1.86	1.79	2.06	2.13	1.94	1.87
	Non-int. Expenses Ratio of UCBs in North Gujarat Region	1.49	1.71	1.40	1.86	1.81	2.07	2.23	2.05	1.84	1.81
14.	Rajkot UCB	4.36	3.81	3.28	4.67	4.18	4.56	4.09	5.83	6.72	5.39
15.	Veraval Peoples UCB	2.62	2.79	2.52	3.38	3.73	3.23	3.02	2.86	2.70	2.67
	Non-int Expenses Ratio of UCBs in Sourashtra Region	3.49	3.30	2.90	4.02	3.95	3.89	3.96	4.34	4.71	4.03
	Non-int. Expenses Ratio of UCBs in Gujarat State	2.32	2.38	2.13	2.78	2.80	2.92	2.73	2.67	2.44	2.18

$$\text{NON-INTEREST EXPENSE RATIO} = \frac{\text{NON-INTEREST EXPENSE}}{\text{VOLUME OF BUSINESS}} \times 100$$

to NIIR. The behaviour of spread ratio is examined by analysing the IIR and IER. The decline in spread ratio has been due to fact that the IER increased relatively much higher than IIR, for the period under study.

The profit identity relationship approach has revealed that the profitability of the UCBs in Gujarat has declined for the period under study. The profitability of UCBs has decline due to an increase in burden ratio and a decline in their spread ratio.

The spread ratio of UCBs recorded fall because the IER increased relatively higher than an increase in their IIR. The burden ratio of UCBs has increased on account of an increase in their NIER and a fall in their NIIR for the selected time span of study. Therefore, the UCBs have to increase their interest incomes and non-interest incomes. They have also to reduce their non-interest expenses, for improving their profitability performance. So the UCBs can improve their profitability performance by introducing the innovative and effective marketing research, market segmentation, increase productivity, greater cost consciousness among bank personnel, computerisation in banks, better customer services, monitoring of expenses, timely asset recovery management drive, marketing of new services, better cash management, fixing accountability of bank personnel, management development programmes for updating the operational and decision making skills of personnel mix.

◆ ◆ ◆

EVA AS A TOOL OF SHAREHOLDERS VALUE CREATION

*Dr. Pravin Saxena
*Dr. P. D. Saini

ABSTRACT

The value based measures have received a lot of attention in the recent years. There are several value based measures, such as Cash Flow Return On Investment (CFROI), Cash Value Added (CVA), Shareholder Value Added (SVA) and Economic Value Added (EVA). Among these, EVA is the most widely used and popular. In this paper an attempt has been made to analyse EVA on the basis of information provided by selected companies.

Conceptually, EVA is superior to accounting profits as a measure of value creation because it recognizes the cost of capital and, hence the riskness of a firm s operations. EVA is a more powerful tool that free cash-flow as it can be used to measure performance, evaluate strategies, allocate capital, restructure balance-sheets and price a company s acquisitions. The concept of EVA has picked up in India. Some companies like Infosys Technologies, HLL, NIIT etc. have already made EVA a part of their annual reports. Thus, the present study has been undertaken to assess EVA and how it is better than traditional measures. For the purpose of the study; the Fast Moving Consumer Goods (FMCG) Industry has been taken into consideration which comprises of 3 companies, Hindustan Lever Ltd. (HLL), Colgate Palmolive (India) Ltd. (CPIL) and Nestle India Ltd. (NIL). The data pertaining to the last three financial years viz. 1997 to 2000 has been taken into consideration. The study is based on secondary data which has been collected from books, magazines journal, newspaper, internet. Financial data has been obtained through Annual Reports. The study has been analysed by implementing financial tools such EPS, ROI, RONW & EVA.

EVA VS. TRADITIONAL PERFORMANCE MEASURES :

Conceptually, EVA is superior to accounting profits as a measure of value creation because it recognizes the cost of capital and, hence, the riskiness of a firm s operations. Furthermore, EVA is constructed so that maximizing it can be set as a target. Traditional measures do not work that way. Maximizing any accounting profit or accounting rate or return may lead to an undesired outcome. Another shortcoming

*Faculty Members, Department of Accountancy & Law, Faculty of Commerce, Dayalbagh Educational Institute (Deemed University), Dayalbagh, Agra 282005. (UP).

of traditional measures is that they don t take into account time value of money. To clarify the benefits of EVA compared to conventional performance measures following analysis is given:

Return On Investment : Return on Investment is very common and relatively good performance measure which has been calculated by dividing Net Income by Total Assets. ROI does not recognize that shareholders wealth is not maximized when the rate of return is maximized. Shareholders want the firm to maximize the absolute return above the cost of capital and not to maximize percentages. Companies should not ignore projects yielding more than the cost of capital just because the return happens to be less than their current return. Cost of capital is much more important hurdle rate than the company s current rate of return.

Return on Equity (ROE) : Another widely used measure of business performance is the accounting return on equity (ROE) ratio which is calculated by dividing Net Income by Book value of shareholders equity. As ROE is so similar to ROI, it necessarily shares all the shortcomings of ROI enumerated earlier. In addition, ROE is particularly sensitive to leverage. Assuming that proceeds from debt financing can be invested at a rate of return greater than the borrowing rate, ROE will increase with greater amounts of leverage. ROE will, in fact, increase as more than optimal debt is issued and the value of the company decreases due to the increase in financial risk. Thus, once again we observe that an accounting-based performance measurement can conflict with the shareholder value criterion.

Earnings Per Share (EPS) : EPS is raised simply by investing more capital in business. If the additional capital is equity (cash flow) then the EPS will rise if the rate of return of the invested capital is just positive. If the additional capital is debt then the EPS will rise if the rate of return of the invested capital is just above the cost of debt. In reality the invested capital is mix of debt and equity and the EPS will rise if the rate of return of that additional capital invested is somewhere between cost of debt and zero. Further EPS will automatically rise at a very fast rate if company issue shares at a very hefty premium. This is because EPS is based only on the number of shares issued and does not include share premium. Thus, it does not at all take into account cost of capital and is worse off compared to ROI and ROE.

Thus the accounting earnings fail to measure reliably the change in the value of the firm mainly because of:

- Alternative accounting methods followed.
- Non-consideration of risk, dividend policy and time value of money.
- Non-reporting of economic substance of transaction.
- Non-consideration of cash flows, cost of capital and forecast horizon the drivers of stock prices.

CALCULATION OF RONW, ROCE, EPS AND EVA OF HLL, COLGATE PALMOLIVE AND NESTLE:

The following formulae have been used for the calculation:

$$\text{RONW / ROE} = \frac{\text{Profit after tax}}{\text{Net Worth}}$$

$$\text{ROCE} = \frac{\text{Profit before interest and tax}}{\text{Debt + Equity}}$$

$$\text{EPS} = \frac{\text{Profit after tax}}{\text{No. of shares outstanding}}$$

EVA = NOPAT Cost of capital employed

where,

NOPAT = Profit after tax before exceptional items + Interest (1 - tax rate)

Cost of capital employed = Average capital employed * Weighted Average Cost of Capital .

Average Capital Employed is the average of the debt and equity of the company. The opening and closing balance sheet values have been taken to calculate the average values.

Equity : This includes paid up share capital, share capital suspense, reserves and surplus.

Debt : This includes secured and unsecured loans excluding the non-interest bearing liabilities.

Cost of Debt : The actual cost of debt of company has been taken. It has been calculated using the formula :

$$Kd = \frac{\text{interest (1 tax rate)}}{\text{Total debt employed excluding non-interest bearing liabilities}}$$

Cost of Equity: The cost of equity has been calculated using the CAPM model. According to CAPM model Cost of equity is given as:

Ke = Rf + b x (Rm Rf)

where :

Rf is the risk free rate of return

Rm Rf is the return on the market over the risk-free rate

β if a measure of the risk of equity e

Risk free rate of return : Risk free rate of return is the rate of return on long term government bonds. There are various methods of calculating risk free rate of return. In the present study, the industry practice has been taken into consideration. The values as published in the annual reports of HLL and NIIT are taken into consideration. The value is taken as 12.5% for the three years.

Market Premium : It is the rate of return of the market index. It is the rate of return expected by shareholders from a well diversified portfolio. The values for the three years have been taken by considering industrial practice. The values are taken as 10%, 10% and 8% respectively.

Beta : Beta measures the percentage change in securities returns for one percentage change in the market returns. It can be obtained by regressing the company s return against the SENSEX. Since all the values were not available the values as given in the BSE India website have been taken for the purpose of the study.

Weighted Average Cost of Capital = It is the weighted average of the cost of equity and cost of debt. It has been calculated using the formula :

$$\text{WACC} = \frac{K_e * \text{average equity} + K_d * \text{average debt}}{\text{Aggregate capital employed}}$$

Hindustn Lever Limited

Using the annual reports of HLL the following values were obtained:-

	EVA STATEMENT	(Rs. in crores)		
		1997	1998	1999
1.	Average Debt	222.56	181.92	220.79
2.	Average Equity	1126.51	1487.26	1908.14
3.	Average Capital Employed	1349.07	1669.18	2128.93
4.	Cost of Debt, post tax	11.80	7.20	8.20
5.	Cost of Equity	20.30	20.30	18.74
6.	Weighted Average Cost of Capital	18.89	18.87	17.64
7.	Cost of Capital Employed 3*6	254.84	314.97	375.54
8.	Profit After Tax, before exceptional items	580.20	837.43	1069.93
9.	Add: Interest after taxes	22.03	19.03	14.55
10.	Net Operating Profit After Taxes (NOPAT)	602.28	856.46	108.44
11.	EVA : 10-7	347.44	541.49	708.94
12.	EVA % Of Capital Employed	25.75	32.44	33.30

TRADITIONAL V/S EVA					
YEAR	ROCE	ROE	EPS	EVA	EVACE
1997	61.05	45.99	29.13	347.44	25.75
1998	58.65	48.89	42.00	541.49	32.44
1999	61.84	50.87	48.74	708.94	33.30

The above table shows that HLL has continuously improved the shareholder value. It has been able to improve the profits and also the cost of capital is decreasing. The EVA values have thus increased. The above table also shows that the traditional measures are showing very high values especially ROCE as compared to EVACE.

COLGATE PALMOLIVE (INDIA) Ltd.

EVA STATEMENT		(Rs. in crores)		
		1997	1998	1999
1.	Average Debt	-	-	-
2.	Average Equity	250.09	275.76	293.55
3.	Average Capital Employed	250.09	275.76	293.55
4.	Cost of Debt, post tax	-	-	-
5.	Cost of Equity	17.6	17.6	16.58
6.	Weighted Average Cost of Capital	17.6	17.6	16.58
7.	Cost of Capital Employed 3*6	44.02	48.53	48.67
8.	Profit After Tax, before exceptional items	78.92	80.07	45.67
9.	Add: Interest after taxes	-	-	-
10.	Net Operating Profit After Taxes (NOPAT)	78.92	80.07	45.67
11.	EVA : 10-7	34.91	31.54	-3.00
12.	EVA % Of Capital Employed	13.95	11.53	-1.02

TRADITIONAL V/S EVA					
YEAR	ROCE	ROE	EPS	EVA	EVACE
1997	42.63	27.29	5.89	34.91	13.95
1998	25.22	15.50	3.36	31.54	11.53
1999	29.28	17.24	3.81	-3.00	-1.02

In case of Colgate Palmolive there is a continuous decrease in EVA. In the year 1999, it has destroyed shareholder value as is evident from the negative figure of 1.02. Even when the EVA figure is negative the traditional measures do not indicate it. They still show a positive figure. In the year 1999 EVACE has decreased but ROCE,

ROE and EPS are showing an increase. As depicted that the profits of Colgate Palmolive have shown a steep decline while the cost of capital depicts only a slight fall, it has not been able to control costs or improve profits thereby resulting in decline in EVA.

NESTLE (INDIA) LTD.

	EVA STATEMENT	(Rs. in crores)		
		1997	1998	1999
1.	Average Debt	309.95	284.90	183.33
2.	Average Equity	253.49	267.46	282.41
3.	Average Capital Employed	563.44	552.36	465.74
4.	Cost of Debt, post tax	10.40	12.60	14.95
5.	Cost of Equity	16.00	16.00	15.30
6.	Weighted Average Cost of Capital	12.92	14.20	15.16
7.	Cost of Capital Employed 3*6	72.74	78.43	70.61
8.	Profit After Tax, before exceptional items	74.33	86.19	98.47
9.	Add: Interest after taxes	32.83	28.55	17.24
10.	Net Operating Profit After Taxes (NOPAT)	107.16	114.74	115.71
11.	EVA : 10-7	34.42	36.31	45.10
12.	EVA % Of Capital Employed	6.11	6.57	9.68

Comparison of Traditional Method V/S EVA:

TRADITIONAL V/S EVA					
YEAR	ROCE	ROE	EPS	EVA	EVACE
1997	25.63	30.32	7.71	34.42	6.11
1998	31.58	31.21	8.94	36.31	6.57
1999	46.04	34.10	10.21	45.10	9.68

Nestle (India) Ltd. has also been able to improve its EVA year by year. But in this case also as can be seen from the above table the traditional measures are showing bloated figures. For instance, in the year 1999 ROCE of Nestle was 46.04% while EVACE was 9.68%.

Comparison of EVACE of Companies under Study

Year	CPIL	HLL	NIL
1997	13.95	25.75	6.11
1998	11.43	32.44	6.57
1999	-1.02	33.30	9.68

The above table shows that in all the three years HLL is the No.1 in terms of EVACE and has been able to improve its EVACE year by year. Although Colgate Palmolive stands second in 1997, 1998 its EVACE is continuously decreasing. Nestle has low figures of EVACE but they are showing a continuous improvement. While the EVACE of Colgate Palmolive is negative in 1999 that of Nestle is 9.68 bringing it to second position.

Comparing EVA with other traditional performance measures indicates that all the three companies depict a very rosy and positive picture in terms of ROCE, ROE and EPS for all the three years. The traditional measures do not reflect the real value of shareholders and EVA should be measured to have an idea about the shareholder value. The corporate sector needs to examine bigness as virtue as accounting numbers have failed to capture shareholder value creation or destruction.

WAYS TO IMPROVE EVA : There are basically two parts to EVA, efficiency and growth. EVA is the difference between the percent rate of return and the percent cost of capital, or what we call the return spread (that is a measure of efficiency) times the capital (that is the measure of size). To increase EVA a company can improve its efficiency, reduce its cost of capital, or increase its capital. It is an issue of both quality and quantity. EVA, as a measure, points out that growth without efficiency is bad, and also that efficiency without growth is not good. The following strategies can be recommended for improving EVA:-

- Generating more operating profits without investing any more capital in the business.
- Investing additional capital in businesses that earn more than the cost of capital.
- Withdrawing or liquidating capital from businesses that fail to earn return greater than the cost of capital.

REFERENCES

Kondragunta, Chaith S. (2000), Winning with EVA , *Business Today*, February 22, pp 82-109.

Deveshwara, Y.C., (1999), Managing Shareholder Value , *Business Today*, Sep. 7-21, p158.

Jonathan Low & Tony Siesfeld, Measures that matter , *Strategy and Leadership*, April 1998, Vol. 26, No.2.

◆ ◆ ◆

RETURN ON CAPITAL EMPLOYED IN HOTEL INDUSTRY

*Dr. Ravi Kumar Jain

ABSTRACT

The main interest of proprietors is to earn satisfactory returns on there investments. Shareholders measure the success or failure of a company in terms of profit earned on capital employed. In this paper, an attempt has been made to execute ROCE in hostel industry.

Return on capital employed can be used to show the efficiency of a business as a whole. The term capital employed means the value of the assets which are effectively used by a concern and which contribute to the earnings of that concern during a particular year. So the value of idle and fictitious assets is excluded while arriving at the amount of capital employed. The term 'Capital employed' in a business may be defined in a number of ways but the most widely accepted terms are 'Gross Capital Employed' and 'Net Capital Employed'. Another interpretation of the term is 'Proprietors' Net Capital Employed'. Gross capital employed usually comprises the total assets used in a business, whereas net capital employed consists of the total assets of the business less current liabilities. Proprietors' net capital employed can be obtained by deducting all current and long term liabilities from the total assets figure as shown in the assets side of the balance sheet. In other words, proprietors' net capital employed consists of paid up capital plus reserves and surplus belonging to shareholders.

The profitability of a concern depends on two factors : (1) the rapidity of the turnover of capital employed and (2) the operating profit margin. Profitability is the product of these two factors and therefore maximum or optimum profits can be earned only by maximising each. In technical terms, the combination of these two factors is known as the 'triangular relationship'. Its significance exists not only in its use as an analytical tool but also because the profitability ratio can be calculated directly from the specific earning and investment data. It is useful in describing the two basic forces bearing upon the ultimate results and therefore establishes the areas of business which must be properly controlled if desired results are to be realised. The terms 'operating assets' and 'operating income' are

*Associate Professor, Department of ABST, University of Rajasthan, Jaipur

used to describe capital employed and income from the utilisation of the capital employed in the business.

To assess the overall profitability of a concern return on capital employed is calculated. The previous chart, called Dupont chart shows clearly that an increase in gross profit or a decrease in expenses increases the return on capital employed, if these changes are not accompanied by an off-setting charge on capital employed. On the other hand, if an increase in gross profit is accompanied by a corresponding increase in capital employed (as can happen, for example, when a growth in sales volume is accompanied by an increase in inventories and account receivables), there will be no change in the overall percentage return. Here, it may be noted that the amount of net income is arrived at before deducting the amount of interest on long-term borrowings because long-term borrowings are also a part of capital employed so income should match capital employed.

Return on capital employed is calculated by dividing the figure of net profit before interest and tax by the amount of capital employed. Net profit for this purpose is determined according to the base used. If gross capital employed is taken, the amount of net profit will be calculated by excluding any income from the assets excluded from capital employed and eliminating adjustments such as writing off preliminary expenses etc. However, the amount of interest on short-term borrowings and long-term borrowing is not deducted from the net profit for this purpose. If the concept of net capital employed is used, profit is calculated by deducting interest on short-term borrowings from net profit. Interest on Long-term loans is however not deducted. Generally, capital employed and net capital employed are synonymous.

The return on capital employed can be calculated as follows :

$$\text{Return on capital employed} = \frac{\text{Net profit before interest and tax}}{\text{Capital employed}} \times 100$$

Return on capital employed indicated the efficiency with which management has effectively utilised funds provided by owners and long-term creditors. The higher the rate of return on capital employed, the greater will be the efficiency of management in utilising the funds entrusted to them. As stated earlier, the efficiency of management in utilising the funds at their disposal depends upon the turnover of capital employed and the profit margin. The higher the turnover of capital employed and the profit margin, the higher will the efficiency of management be in utilising the funds at their disposal.

Table 1
Return on Capital Employed by the Hotel Industry of India for the Period of the Study (1994-95 to 1998-99)

(Percentages)

Hotels	1994-95	1995-96	1996-97	1997-98	1998-99	Average
The East India Hotels Ltd	15.33	20.09	18.67	14.90	9.77	15.75
The Indian Hotels Company Ltd	24.89	27.18	24.13	18.73	16.60	22.31
Uttar Pradesh Hotels Ltd	13.76	21.04	16.94	9.02	4.78	13.11
Asian Hotels Ltd	49.16	61.38	55.02	33.80	23.95	44.66
Bharat Hotels Ltd	25.49	26.86	18.06	14.73	6.55	18.34

Source : Annual Reports of the Companies of the Hotel Industry of India (1994-95 to 1998-99)

The East India Hotels Limited : The return on capital employed ratio of the East India Hotels Limited showed a fluctuating trend and varied within the range of 9.77 per cent to 20.09 per cent. It was highest in 1995-96 and lowest in 1998-99. On an average, the ratio was 15.75 per cent. Though the company made a satisfactory profit on capital employed, owing to an increase in capital employed in the last 3 years of the study, the same proportion of return could not be maintained. It was much less than the average return in 1998-99. The management should try to make the optimum use of capital employed.

The Indian Hotels Company Limited : The ratio of return on capital employed for the Indian Hotels Company Limited as shown in table 1 recorded a decreasing trend after 1995-96. The ratio was 24.89 percent in 1994-95 which increased to 27.18 percent in 1995-96. It shows that the company was making an effective use of capital employed. But after 1995-96, the amount of capital employed increased, but profits did not increase in the same proportion. So the ratio decreased. It reduced to 24.13 per cent in 1996-97 and decreased to 16.60 per cent in 1998-99. Though the ratio of return on capital employed is satisfactory, it is still suggested that the management should improve the profitability through an optimum use of capital employed.

Uttar Pradesh Hotels Limited : The ratio of return on capital employed for Uttar Pradesh Hotels Limited showed a decreasing trend after 1995-96. In the year 1994-95, the ratio was 13.76 per cent which increased to 21.04 per cent in 1995-96 because of the increase in receipts and a proper utilisation of capital employed. But in the following years, the ratio showed a decreasing trend because capital employed increased. Though the returns also increased, this increase was not sufficient in

the comparison to the increase in capital employed. The ratio reduced to 4.78 per cent which is not satisfactory. On an average, the ratio was 13.11 per cent. During the last 2 years of the study, the ratio was below average which denotes an unsatisfactory profitability position. The management should try to increase the profitability otherwise it might face problems even in the payments of interest.

Asian Hotels Limited : The ratio of return on capital employed for Asian Hotels Limited as depicted by table 1 reveals a very satisfactory position, though it showed a fluctuating trend. It increased to 61.38 percent in 1995-96 and decreased to 23.95 per cent in 1998-99. On the whole, the average has been satisfactory at 44.66 per cent being the highest among all the hotels. The ratio decreased during the last three years because of an increase in capital employed which was more than that returns. The profitability position as regards the return on capital employed can be regarded as Sound because it has sufficient cushion against the payment of interest and dividend.

Bharat Hotels Limited : Like other hotels, Bharat Hotels limited also recorded a fluctuating trend in the ratio of return on capital employed as evident from table 1. The ratio which was 25.49 per cent in 1994-95 slightly increased to 26.86 per cent in 1995-96 but decreased to 6.55 per cent in 1998-99 following a decreasing trend. The average of the ratio was 18.34 per cent which is satisfactory, but during the last 2 years of the study, the return on capital employed was less than average which cannot be regarded as favourable. It shows that the capital employed could not be properly used by the management. Except this, the profitability was satisfactory.

The above analysis shows that the position of the Hotel Industry is satisfactory, but proper utilisation of capital employed can boost the profitability.

SELECT BIBLIOGRAPHY

Duck, REV and Jervis FRJ, Management Accounting. USA : George, G. Harrap, 1964.

Howard and Upton, Introduction to Business Finance. New York : McGraw Hill, International Student Ed.

Langley, FP, Introduction to Accounting for Business Studies. London : Butterworths, 1978.

Foulke, Roy A, Practical Financial Statement Analysis. New York : McGraw Hill, 1957.

Choudhary, SB and Roy, B, Analysis and Interpretation of Financial Statements through Financial Ratios. New Delhi : Orient Longman 1970.

Kennedy, RD and McMullen, SY, Financial Statements Form, Analysis and Interpretation. Illinois : Richard, 1952.

◆ ◆ ◆

BOOK REVIEW

CORPORATE FINANCIAL REPORTING

Editors : Bhabatosh Banerjee
Arun Kumar Basu

Corporate financial reporting is the mechanism by which a true and fair view of the financial performance of a corporate body is disclosed and reported to the external parties having interest in it. It should enable them to take right decisions for their future course of actions. The information disclosed should be timely, most relevant, sufficient, reliable, comparable year to year and segment to segment also with country to country. The financial accounting and its reporting through annual- reports must be on the basis of globally accepted reporting norms and standards. The emergence of WTO, liberalization and globalization of Indian economy, and computerized based accounting and reporting requires the accounting and reporting practices to standardize with the requirements of international standards. The existing Indian financial accounting and financial reporting systems has to bring necessary changes.

This book provides a deep insight to the practicing professional and executives in the field of corporate financial reporting. The book contains high quality of research papers and articles contributed by researchers on corporate financial reporting. These articles are relating to the new dimensions of corporate reporting and information disclosure requirements. A few of them are: Evaluation of Accounting standards in India, E-Financial Reporting, Segment Reporting, Foreign currency translation and corporate reporting in India, Cash flow reporting in India, Regulation of corporate reporting in India, Challenges to the Corporate reporting in twenty-first century, Economic value added disclosures for shareholders, and Presentation of financial statement and company account structure in India etc.

The book is published by Department of Commerce, University of Calcutta under Special Assistance programme of UGC

This book is useful to the researchers, academicians, and students of commerce and management It is also equally useful to the practicing professionals, policy makers and analysts.

Dr. D.D. Meena
Reader
Pt. Jawaharlal Nehru Institute of Business Management,
Vikram University, Ujjain (MP)

IAA NEWS

DELHI BRANCH

The Delhi Branch of Indian Accounting Association was re-launched, with an Inaugural Address on 'Transparency in Corporate Financial Reporting', by Prof. L.S. Porwal, Former President of IAA, in the Premises of Dept. of Commerce, Delhi University, Delhi School of Economics, DU.

The following members were elected as office bearers :

Patron	: Prof. Y.P. Singh, Head & Dean, Faculty of Commerce & Business
President	: Prof. R.N. Goyale, Former Head & Dean, Faculty of Commerce & Business
Vice-President	: Dr. Avinash Chander, Director Technical (ICAI)
	Dr. Ashok Sehgal (SRCC)
Secretary	: Dr. J.L. Gupta (ARSD)
Addl. Secretary	: Mr. Anil Kumar (SRCC)
Jt. Secretary	: Dr. V.P. Bansal (SC)
Treasurer	: Ms. Abha Mathur (SC)

The newly elected office bearers have launched a rigorous membership drive while concentrating on the academic and research objectives of the Association. Delhi Branch of IAA organised a Seminar on 'Research Methodology in Business', on 1st December, 2001, by Prof. L.C. Gupta, Director, Society for Capital Market Research and Development, Delhi. and former Member of SEBI. A large number of people participated in the Seminar. Prof. Y.P. Singh Presided.

Congratulations to the newly elected bearers, particularly to Dr. J.L. Gupta, who kept his promise made at the 24th All India Accounting Conference, Tirupathi.

BHUBANESWAR BRANCH

IAA Bhubaneswar Branch has been formed by the members of the Utkal region. The branch has been inaugurated by Prof. D. Prabhakar Rao, The General Secretary, IAA on 29th December, 2001, in this context, a Seminar on Accounting Education has been organised. Prof. Rao after lighting the lamp of the branch, presented a brief profile of IAA since inception. He called for the dedicated efforts of the members of Utkal region to establish coherence with the objectives of IAA while effecting their career goals of academic and research development. The particular role of IAA has been stressed in the wake of globalisation and harmonisation of accounting standards, besides fundamental and applied research in Accounting and related desciplines.

Prof. Surya Kant Das, an 82 years old young man of Utkal University, picturesquely presented his valuable experiences as a student, teacher and administrator. He recalled his Accounting professors like Prof. Sen Gupta at Calcutta University. He has added a lot of human while referring to statements like A for

Accounting; B for Budgeting .... Z for Zerobased Budgeting etc. Prof. B.N. Patnaick presided over the Seminar. He discussed the growth of development of Accounting in India with special reference to Human Resource Accounting. Prof. R.K. Jena presented his views on a number of areas in Accounting Education and Research. Prof. Ranjan K. Bal narrated his pleasent experence of 24th All India Accounting Conference held at Tirupathi and spoke of his excitement in mobilising the academicians, practitioners, professionals and researchers in forming the Bhubaneswar Branch. Prof. D. Prabhakar Rao, Prof. S.K. Das and R.K. Jena congratulated Prof. R.K. Bal for his initiative in forming the branch. Prof. J.K. Parida, the Head of the Department of Commerce, Utkal University introduced the guests while Mr. A.K. Swain proposed a hearty vote of thanks. Other speakers include Prof. P.C. Tripath; Prof. Samsung Maharana; Prof. Pradyukt Kr. Pradhan; Prof. D.V. Ramana of Xavier Institute of Management; Dr. C.R. Mishra of Kalinga Inst. of Industrial Technology; Shri A.K. Tripathi, Chartered Accountant etc.

Prof. D. Prabhakara Rao
General Secretary

25TH ALL INDIA ACCOUNTING CONFERENCE

Next Conference will be held at Jodhpur (Rajasthan) in December 2002.

Dates will be communicated later on

Topics for 25th All India Accounting Conference

INTERNATIONAL SEMINAR	:	*ACCOUNTING EDUCATION AND RESEARCH*
TECHNICAL SESSION - I	:	Measuring Corporate Performance : Balanced Score Card Applications
TECHNICAL SESSION - II	:	Transfer Prising

Venue - Department of Accounting, Jai Narayan Vyas University, Jodhpur

PROPOSAL FOR YOUNG RESEARCHER AWARD - 2002

Indian Accounting Association invites proposals on research works done during the last five years in the area of Accounting by Scholars members of not more than 35 years of age as on 31.12.2001 for the consideration of Young Researcher Award - 2002. The proposal may be submitted to the undersigned on or before 30th June 2001.

The Young Researcher Award - 2001, was given to Dr. Vijay Kumar Shrotreya. Congratulations to Dr. V.K. Shrotreya.

Nov. 2, 2001 **Prof. D. Prabhakara Rao**

Guideline for the Scholars submitting papers for publication in Indian Journal of Accounting

MANUSCRIPT

A manuscript will be accepted only on the understanding that it is an original contribution which has not been published previously and is not under consideration for publication elsewhere. A paper should be up to 2500 words in length, excluding illustrations, tables and bibliography. The entire manuscript, including reference list and figure captions, should be presented as A4 double-spaced typescript with generous margins, complete in all respects. All papers must be numbered consecutively. On separate sheets please give (a) the full title of the paper, author's name(s) and affiliation(s) in exact form required for publication, and an abstract not exceeding 150 words; (b) in not more than 100 words author biography and current interest.

STYLE

The style should be clear and concise. Number of references should be appropriate to the length of the paper. Describe sample surveys and other data collection methods in enough detail for an expert to assess their validity. Number (1 2 3) main headings and up to two orders of sub-headings within the text.

ABBREVIATIONS

While using abbreviations first write out the full term followed by its abbreviation in parenthesis, preferably in capitals without full stops.

TABLES

The tables should be numbered consecutively and given adequate titles or headings. The tables must be referred to in test. They should supplement rather than duplicate text data.

ILLUSTRATIONS

The illustrations should be drawn large and clearly and on separate sheets. Captions should be supplied and all illustrations must be cited in text as Figure 1, Figure 2 etc. and numbered accordingly.

REPRODUCTIONS OF TEXTS

If illustrations are borrowed from published sources written permission must be obtained from the copyright holder and a credit line acknowledging the

source added to the caption. Such permission must also be obtained and acknowledged for quotations totalling more than 250 words and for tables borrowed verbatim from published sources. Permission letter should accompany the manuscript, but if you have been unable to obtain them please point this out. With shorter quotations a bibliographic credit is sufficient.

REFERENCES

If an author is cited in text a data should follow in brackets, with the full details given in a reference list in alphabetical order at the end of the text. Multiple entries by one author or a set of authors in the same year should be indicated by postscripts a, b (1991a, 1991b), etc. The list of references should follow the convention illustrated by the following examples :

1. Articles from Journal

Guy, D.M. and J.D. Sullivan, (1988), The Expectations Gap Auditing Standards, The Journal of Accountancy, (April), pp

2. Books

Taguchi, G.E., A. Elsayed, and T.C. Hsiang, (1989), Quality Engineering in Production Systems, McGraw Hill : New York, pp

3. Articles in Books

Plummer, J., (1978), 'A theoretical view of advertising communication', in Marketing Management and Administrative Action (ed.) Britt, S. & Boyd, H. 4th edition, 376-382. McGraw Hill : New York, pp

4. Reports

American Institute of Certified Public Accountants Special Committee on Financial Reporting, (1994), Improving Business Reporting - A Customer Focus : Meeting the Information Needs of Investors and Creditors. AICPA : New York.

◆ ◆ ◆

IAA EXECUTIVE COMMITTEE 2001-2002

INDIAN JOURNAL OF ACCOUNTING

Indian Journal of Accounting is an official publication of Indian Accounting Association. It is published twice a year, in June and December respectively. The scope of the Journal encompasses all areas of Accounting including Auditing. Taxation, Management Accounting, Cost Accounting and Information System. It seeks to encourage publication of high quality, research, research oriented and original articles. Two copies of the manuscript for publication should be submitted by the author(s) typed in double space. The article should not normally exceed 2500 words. Article should be typed on one side only of A4 paper in double-line spacing with wide. Authors are requested to submit articles on disc (using any well known word=processing packages-Word Perfect, MS-Word etc.). Two copies of the printout should be sent to the editor alongwith the disc clearly marked with the software package used including version number, author(s)' name and short title of the article. The hard copy and electronic files must match exactly. Papers submitted for consideration in Indian Journal of Accounting should be accompanied by a declaration by the authors that they have not been published or submitted for publication elsewhere. Editorial decision regarding articles accepted for processing will be communicated in 90 days' time. A separate list of references should be used and not made part of the footnotes. The name of the author(s) should not appear on the manuscript to facilitate blind review. Indian Journal of Accounting owns no responsibility for the views expressed by the author(s). For book review to be included in the Journal, only reference books and research publications are considered. Two copies of each such publication should be submitted. All submissions and editorial enquiries should be addressed **The Chief Editor, Dr. Nageshwar Rao, Director, Pt. Jawaharlal Nehru Institute of Business Management, Vikram, University, Ujjain-456010.**

Indian Accounting Association an organisation of academicians and professionals from business, industry and government is basically a forum of persons actively interested in the advancement and dissemination of accounting knowledge. Membership of the Association (se up in 1970 vide reg. no. 429/68-69) is open to academics and professional who are willing to assist in achieving the objectives of the Association. Members are entitled to participate in the activities of the Association and receive a free copy of Indian Journal of Accounting and selected research publications.

The membership subscription and rates of subscription of Journal are as under:

			INDIAN	*ABROAD*
Individual	:	*Annual*	Rs. 200	US $ 25
		Life	Rs. 1200	US $ 100
Institutional	:	*Annual*	Rs. 500	US $ 100
		Permanent	Rs. 3000	US $ 250

The subscription of the Journal may be sent by Cheque/Draft eighter to **"Treasurer, Indian Accounting Association Rajkot" addressed to Dr. Pratap Singh Chauhan, Head, Department of Business Management, Saurashtra University, Rajkot or "IAA-Chief Editor, Indian Journal of Accounting", addressed to The Chief Editor, Dr. Nageshwar Rao, Director, Pt. Jawaharlal Nehru Institute of Business Management, Vikram, University, Ujjain-456010.**

Printed in India by Dr. D. Prabhakar Rao at Neha Printing Press, Ujjain, Tel. 0734-512591 and published by him on behalf of the Indian Accounting Association, Udaipur-313001